TCT-300

Tape Cartridge Transceiver

USERS MANUAL

DIGITGRAPH
P. O. Box 4249
Tucson, Arizona 85717

Suite 10

10632 North 21st Avenue Phoenix, AZ 85029 (602) 944-2221

THREE PHOENIX COMPANY

TABLE OF CONTENTS

SECTION		PAGE
I.	INTRODUCTION	1
II.	SPECIFICATIONS	5
III.	FEATURES AND OPTIONS	7
IV.	INSTALLATION	9
V.	INTERFACE	11
VI.	OPERATOR PANEL INDICATORS	15
VII.	OPERATOR PANEL CONTROLS	19
VIII.	SETUP CONTROLS	23
IX.	OPERATION	27
X.	OPTIONAL FEATURES	35
XI.	OPERATOR CARE AND MAINTENANCE	43
XII.	MAINTENANCE PHILOSOPHY	43
XIII.	THEORY OF OPERATION	45
XIV.	CONTROL PROGRAM	49
XV.	PWB JUMPER OPTIONS	51
XVI.	MAINTENANCE ADJUSTMENTS	55
XVII.	SUBASSEMBLY REPLACEMENT PARTS	59

DIGITGRAPH
P. O. Box 4249
Tucson, Arizona 85717

Information in this manual is subject to design change and/or product improvement

Copyright 1976 Three Phoenix Company

Revision 2
December 1976

Figure 1

I. INTRODUCTION

The TCT300 Tape Cartridge Transceiver is designed for use in Data Communications Applications either as a stand-alone unit or in conjunction with a keyboard terminal (teletypewriter, CRT Terminal, etc). The TCT300 is a general purpose tape cartridge recorder and may be used in virtually any application that requires storage and retrieval of digital information. Typical applications are:

- Program and data storage for interactive time-sharing terminals.
- Off-line data collection/preparation with subsequent on-line transmission to remote computer center.
- Data-logging device in conjunction with CRT Terminal (provides journaling of CRT/Computer conversation for future reference).
- Linking of high and low speed communications facilities (i. e. 10 cps teletypewriter to 1200 baud network).
- Off-line text-editing device for document capturing and editing.
- And many others.

The TCT300 is available as a basic data recorder/transmitter and has optional editing, data searching, and remote control features.

The TCT300 is compatible with equipment such as:

- Teletype models 33, 35, 37, 38
- DEC LA36 DEC Writer
- GE Terminet 300, 1200
- Memorex 1240, 1270, 1280
- GENCOM DTC300
- CTSI Execuport 300, 1200
- Hazeltine 1000
- Datapoint 2200, 300, 3300
- TEC Data-Screen and Mini TEC
- LSI ADM-1, ADM-2, and ADM-3
- Various other CRT Terminals
- OPSCAN - 17 Source Document Recorder
- And others

The TCT300 will interface with virtually any ASCII coded device that has an asynchronous bit serial RS232 interface.

Data received by the TCT300 is buffered and then written on tape as a 256 character Data Block. Each Data Block is separated by an Interblock Gap. Data may also be written in blocks of 200 characters, with the remaining 56 character positions written as "NUL" characters. (NUL characters are not transmitted). This is to allow character insertion when editing the tape, up to 56 characters per 200, and is a part of the EDIT option.

The data buffer is, in essence, transparent. Operator and Remote Control are effective as though the device were an incremental drive (i. e., each character written on tape as it is received; transmitted as it is read from tape, etc.).

Read/Write operations and buffer control are accomplished internally in the TCT300 Controller.

Included (optional) are Editing Controls which allow modification of any record on tape, or character(s) within a record. Characters may be deleted or modified or additional characters may be inserted (up to 56 consecutive or non-consecutive characters per 200). Also included (optional) are Search Controls to allow rapid location of specific recorded data.

The 3M DC300A Data Cartridge or equivalent is used as the storage media. Tape status (Beginning of Tape, Early Warning, End of Tape) is monitored and appropriately indicated and effected. (See Figure 3). Write-Lockout is utilized to inhibit Record and Edit functions. Storage capacity of the tape is approximately 300,000 characters per track (in the "full" mode); or initially 230,000 characters (in the "Compressed" mode), expandable to 300,000.

Tape speeds and corresponding modes of operation are as follows:

RECORD (Write Data Block)	- 30 ips
XMIT (Read Data Block)	- 30 ips
SEARCH FORWARD	- 30 ips
SEARCH REVERSE	- 30 ips
FAST FORWARD	- 90 ips
REWIND	- 90 ips

An optional rack mounted version (TCT300R) is available. The TCT300R can be expanded to 4 tracks giving a total cartridge capacity of 1.2 megabytes characters. The TCT300RD (Dual Drive rack mounted version) increases this capacity to 2.4 megabytes on line. For purposes of this manual, the TCT300RD can be treated as two independant TCT300R's mounted in the same cabinet.

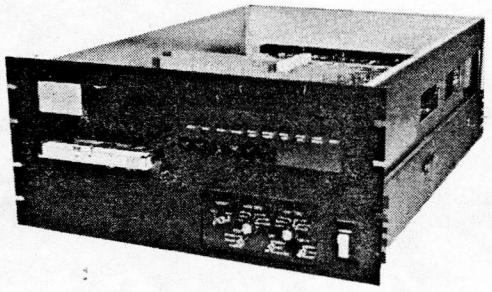

DIGITGRAPH
P. O. Box 4249
Tucson, Arizona 85717

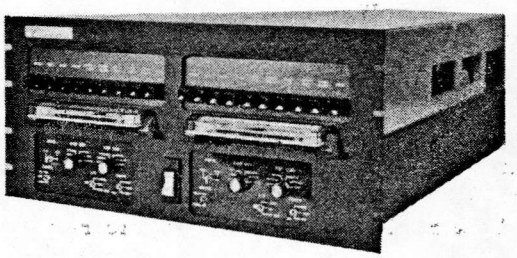

II. SPECIFICATIONS

PACKAGING

The TCT300 is packaged as a desk top unit, containing a single drive or a 19" rack mount containing one or two drives.

CONTROLS AND INDICATORS

All operator controls and indicators are located on the front Control Panel.

ENVIRONMENTAL REQUIREMENTS

This device is designed for operation and storage under the following conditions:

OPERATING ENVIRONMENT

Temperature: 5 - 45 degrees C (41 - 113 degrees F)

Relative Humidity: 20%-80%, non-condensing

NOTE: The data cartridge must be conditioned by exposure to the operating environment for a period of time equal to or greater than the time away from the operating environment. (maximum 24 hours)

STORAGE ENVIRONMENT

Temperature: 0 - 45 degrees C (32 - 113 degrees F), (Cartridge)
0 - 50 degrees C (32 - 121 degrees F), (TCT300)

Relative Humidity: 20%-80%, non condensing (Cartridge)
5%-95%, non-condensing (TCT300)

POWER REQUIREMENTS

110 VAC $\pm$ 10% 60 Hz 165 watts
(220 VAC $\pm$ 10% 50 Hz optional)

CHARACTER SET/DATA FORMAT/ENCODING

INPUT/OUTPUT DATA

Data is standard ASCII characters, consisting of a START Bit; 7 DATA Bits; 1 PARITY Bit; and one or more STOP bits received and transmitted serially. (At 110 baud, a minimum of 2 STOP bits are provided in the transmitted data). See Figure 2. An optional 8 Bit Transparency feature is available.

TAPE CARTRIDGE RECORDING METHOD

Recording method conforms to the 3M proposed ANSI Standard. 1600 BPI Phase Encoded. Data is recorded (see Figure 3) in 256 eight-bit character blocks with preamble, postamble and 16 bit polynomial. (Only actual data is available to user). Recorded blocks are separated by an inter-record gap of approximately 1.89".

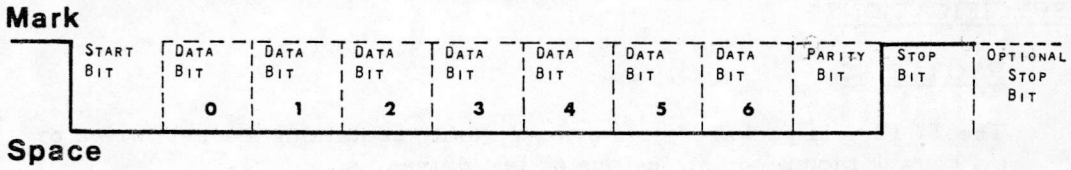

ASCII CODE CHART

Bits 3 ↓	2 ↓	1 ↓	0 ↓	COLUMN / ROW ↓	0 (000)	1 (001)	2 (010)	3 (011)	4 (100)	5 (101)	6 (110)	7 (111)
0	0	0	0	0	NUL	DLE	SP	0	@	P	`	p
0	0	0	1	1	SOH	DC1	!	1	A	Q	a	q
0	0	1	0	2	STX	DC2	"	2	B	R	b	r
0	0	1	1	3	ETX	DC3	#	3	C	S	c	s
0	1	0	0	4	EOT	DC4	$	4	D	T	d	t
0	1	0	1	5	ENQ	NAK	%	5	E	U	e	u
0	1	1	0	6	ACK	SYN	&	6	F	V	f	v
0	1	1	1	7	BEL	ETB	'	7	G	W	g	w
1	0	0	0	8	BS	CAN	(	8	H	X	h	x
1	0	0	1	9	HT	EM	)	9	I	Y	i	y
1	0	1	0	10	LF	SUB	*	:	J	Z	j	z
1	0	1	1	11	VT	ESC	+	;	K	[	k	{
1	1	0	0	12	FF	FS	,	<	L	\	l	¦
1	1	0	1	13	CR	GS	-	=	M	]	m	}
1	1	1	0	14	SO	RS	.	>	N	^	n	~
1	1	1	1	15	SI	US	/	?	O	___	o	DEL

Figure 2

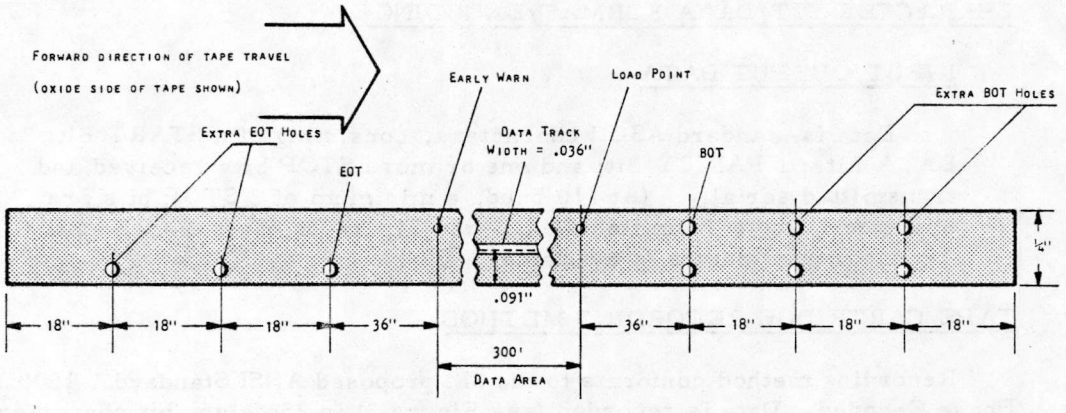

Figure 3

DC300A TAPE LAYOUT

III. FEATURES AND OPTIONS

Standard Features include:

- Read/Write Control
- Fast Forward and Rewind
- EOT/BOT Sensing and Display
- Cartridge-installed and Write-Lockout sensing
- Baud rate Selector 110, 150, 300, 600, 1200, and 2400 baud (4800 baud Xmit only)
- Full/Half-Duplex Data Path
- On Line or Local Operation
- RS232 B/C Interface
- Approximately 300,000 Character Storage Capacity

Optional Features include:

- #100 Basic Search
- #101 Context Search
- #102 Edit
- #103 Character Insert
- #104 Remote Control
- #105 Remote Control (Version 2)
- #106 Line Feed Delay
- #107 Message Error Checking
- #108 8-Bit Transparency
- #109 Auto Track Switching
- #200 20 MA Current Interface
- #201 202 Modem Interface
- #202 Parallel I/O Interface
- #203 External Alarm Control
- #204 4-Track Drive

IV. INSTALLATION

The TCT300 may be unpacked and installed by the user; no specially trained personnel are required. The following procedure should be followed:

Inspection

This equipment was carefully inspected both mechanically and electrically before shipment. It should be physically free of mars or scratches and in perfect electrical order upon receipt. To confirm this, the equipment should be inspected for in-transit physical damage. If there is damage or deficiency see the warranty in Appendix A.

Power Requirements

The TCT300 will operate from 110 VAC 60 HZ (220 VAC 50 HZ optional). A 5 ampere fuse or circuit breaker is used for 110 volt operation.

Three-Conductor Power Cable

To protect operating personnel, the National Electrical Manufacturers' Association (NEMA) recommends that the equipment panel and cabinet be grounded. All Three Phoenix equipment is equipped with a three-conductor power cable, which, when plugged into an appropriate receptacle, grounds the equipment. The offset pin on the power cable three-prong connector is the ground wire.

To preserve the protection feature when operating the equipment from a two-contact outlet, use a three-prong to two-prong adapter and connect the green pigtail on the adapter to ground.

Installation

No special cooling is required, however, the instrument should not be operated where the ambient temperature exceeds 45 degrees C (113 degrees F).

Repackaging for Shipment

The following is a general guide for repackaging for shipment. If you have any questions, contact your local Sales and Service Office.

NOTE

If the equipment is to be shipped to Three Phoenix Company for service or repair, attach a tag to the equipment, identifying the owner and indicating the service or repair to be accomplished; include the model number and full serial number. In any correspondence, identify the equipment by model number and serial number.

(a) Place equipment in original container if available. If original container is not available, a suitable one can be purchased from your nearest Sales and Service Office.

If original container is not used:

(b) Wrap equipment in heavy paper or plastic before placing in an inner container.

(c) Use plenty of packing material around all sides of equipment and protect panel faces with cardboard strips.

(d) Place equipment and inner container in a heavy container or wooden box and seal with strong tape or metal bands.

(e) Mark shipping container with "DELICATE INSTRUMENT," "FRAGILE" etc.

V. INTERFACE

Modem and Terminal interface characteristics conform to the EIA standard RS232 C.

Input signal levels		Output signal levels	
Mark or Off	-4 to -25 volts	Mark or Off	-8 volts with 3K load
Space or On	+4 to +25 volts	Space or On	+8 volts with 3K load

Pin assignments for Modem Connector

Pin	Description
1	Chassis Ground
2	Xmit Data (to Modem)
3	Receive Data (from Modem)
4	Request to Send (to Modem)
5	Clear to Send (from Modem)
6	Data Set Ready (from Modem)
7	Signal Ground
8	Carrier Detect (from Modem)
20	Data Terminal Ready (to Modem)

Pin assignments for Terminal Connector

Pin	Description
1	Chassis Ground
2	Xmit Data (from Terminal)
3	Receive Data (to Terminal)
4	Request to Send (from Terminal)
5	Clear to Send (to Terminal)
6	Data Set Ready (to Terminal)
7	Signal Ground
8	Carrier Detect (to Terminal)
20	Data Terminal Ready (from Terminal)

For detailed data flow, see section VIII, SET UP CONTROLS, figures 7 - 11.

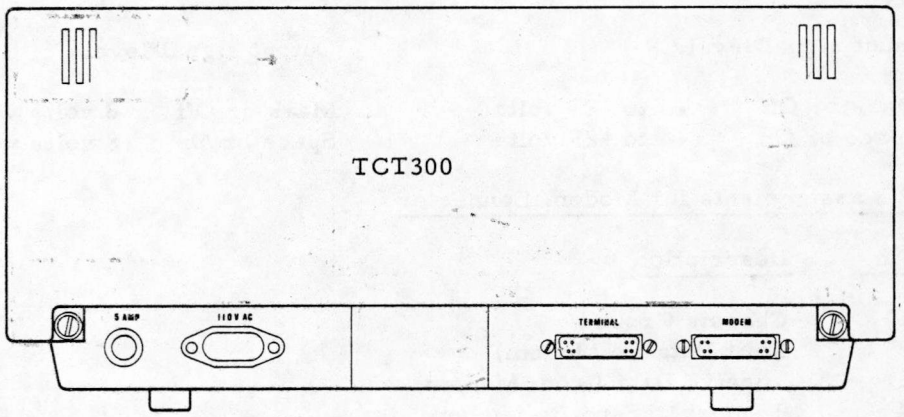
TCT300
5 AMP
110V AC
TERMINAL
MODEM

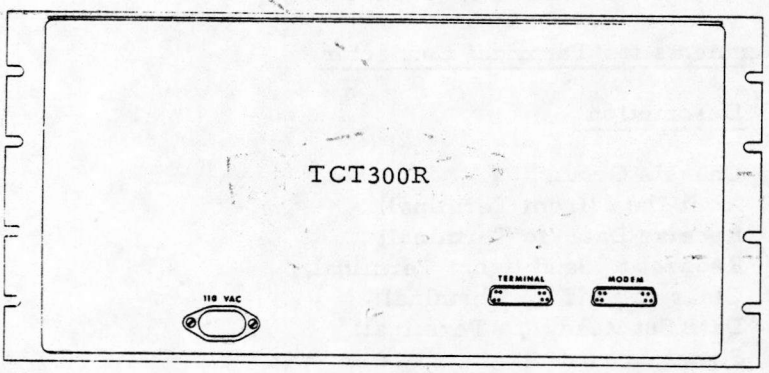
TCT300R
110 VAC
TERMINAL
MODEM

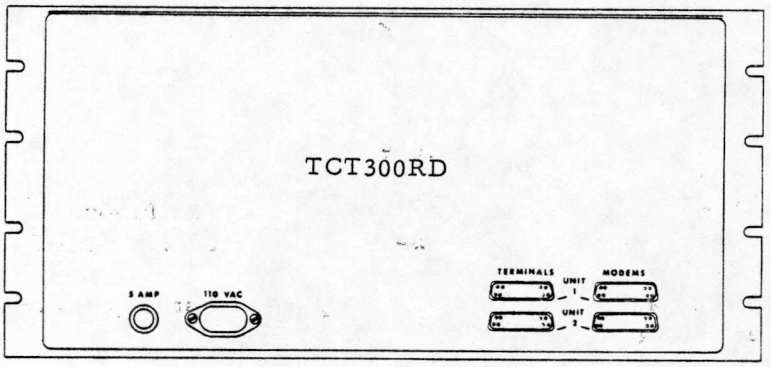
TCT300RD
5 AMP
110 VAC
TERMINALS
UNIT 1
MODEMS
UNIT 2

Figure 4

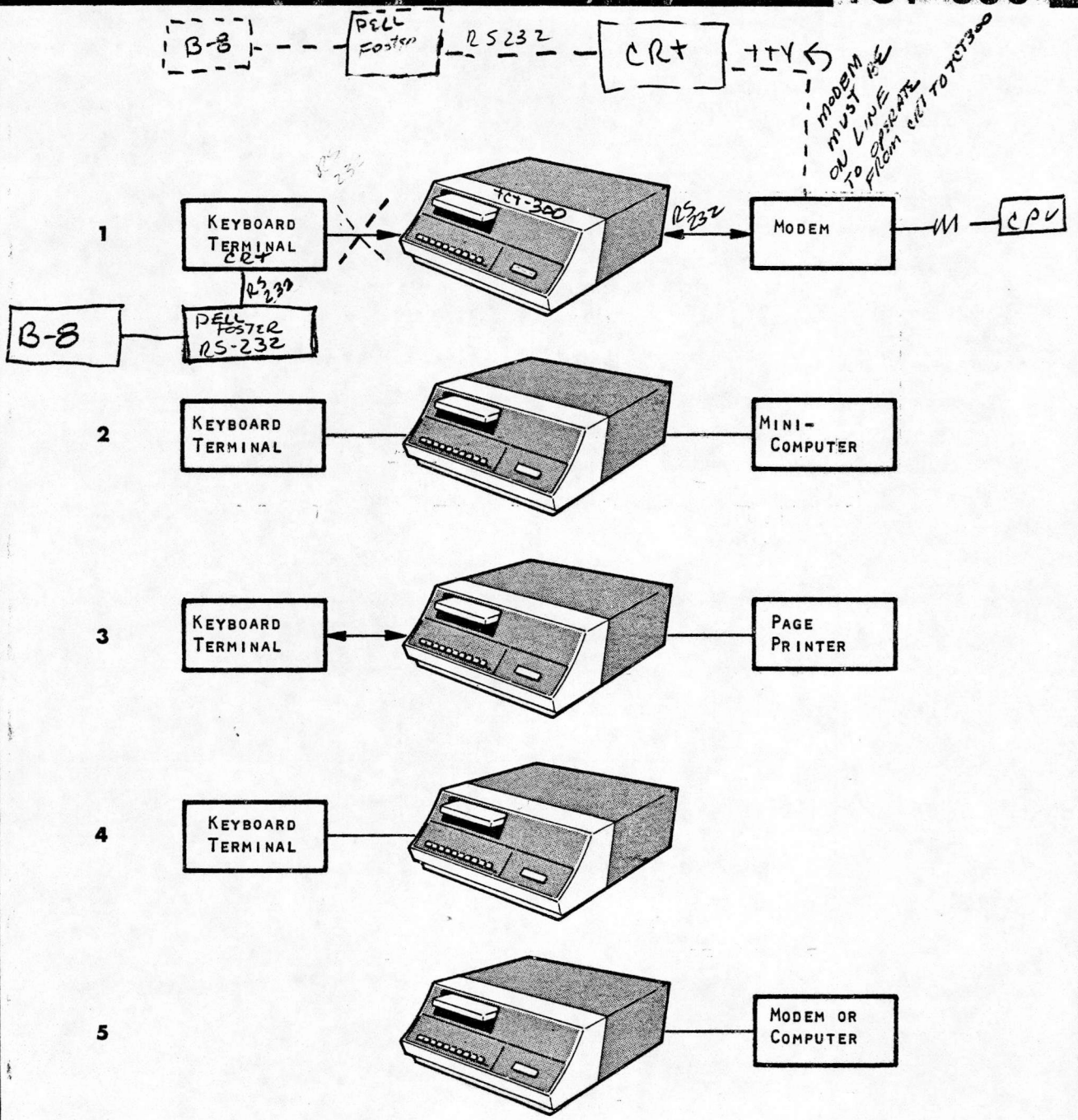

Figure 5

The TCT300 may be interfaced as in Figure 5 above. In example three above, a special adapter cable is used between the TCT300 and Page Printer.

In example 1, 2, and 3 above the TCT300 power must be on in order for signals to be passed through it.

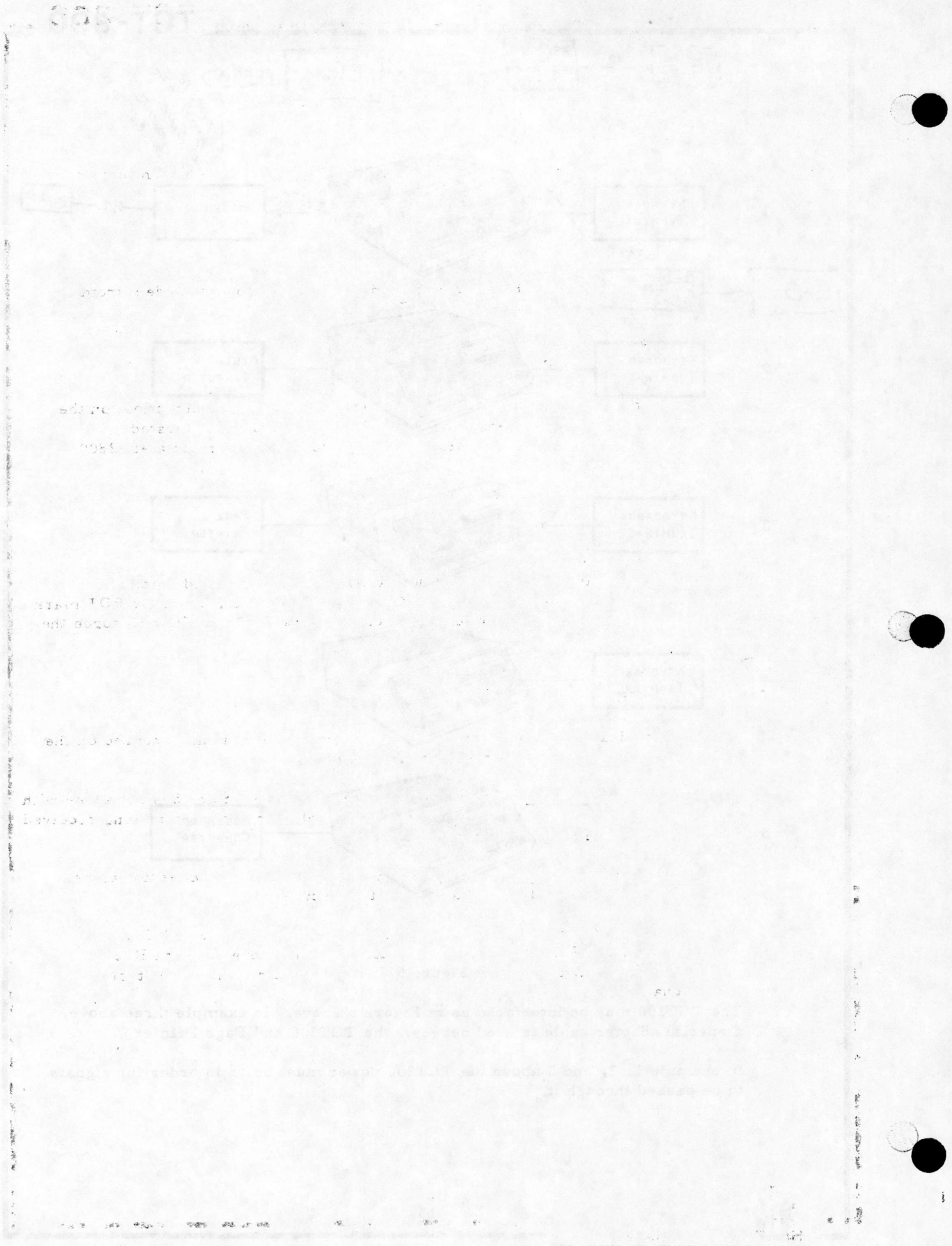

VI. OPERATOR PANEL INDICATORS (refer to figure 6)

(1) RCVR DATA (green)

On indicates data being received by TCT300 from either Terminal or Modem

(2) XMIT DATA (green)

On indicates data being transmitted to Terminal and/or Modem from TCT300.

(3) EARLY WARN (yellow)

On indicates that the EARLY WARNING point (forward direction) on the tape has been reached. The EARLY WARNING point is located approximately 36 inches from the EOT (room for approximately 2800 characters).

(4) EOT BOT (red)

On indicates:

(a) tape has been rewound and positioned to the load point

(b) tape has reached the EOT mark (forward direction) or BOT mark (reverse direction). Reaching either EOT or BOT will force the STOP mode.

(5) INPUT ERROR (red)

On indicates that one of the following error conditions has occured on the input data from the terminal or modem:

(a) Parity Error - the parity of the received character does not agree with the parity selector switch (odd or even). The character being received will be changed to a questions mark (?).

(b) Overrun Error - the input data rate to the TCT300 does not agree with the baud rate selector switch setting.

Any of the above conditions will also turn on the ERROR RESET (21) indicator. These indicators are turned off by depressing the ERROR RESET switch (20) or by receipt of Status Inquiry remote control character sequence.

(6) TAPE ERROR (red)

On indicates that an error condition has occurred while reading the tape and twenty re-tries were unsuccessful. The ERROR RESET (21) indicator will be turned on and the STOP mode will be entered. The read may be tried again by entering the appropriate mode (XMIT, SRCH FWD, or SRCH RVS). If the tape block cannot be read successfully the operator may skip the block by holding the ERROR RESET switch (20) down and depressing the appropriate mode switch.

(7) SRCH MATCH (green)

On indicates either:

(a) XMIT mode was terminated due to the selected Stop code being detected and transmitted (see Stop Code Selector (31)).

(b) SEARCH FORWARD or SEARCH REVERSE mode was terminated by detecting the selected stop code or character sequence on the tape. (See Search Operation Section IX).

(8) BUFFER FULL (yellow)

(a) If in RECORD mode this indicator will be on periodically while a data block is being written on tape.

(b) If in EDIT mode and CHARACTER INSERT this indicator will be turned on when the TCT300 buffer is full and no more characters can be inserted. (See Character Insert Operation Section IX).

(c) This indicator will be turned on if an attempt is made to load more than 16 characters into the context search argument buffer.

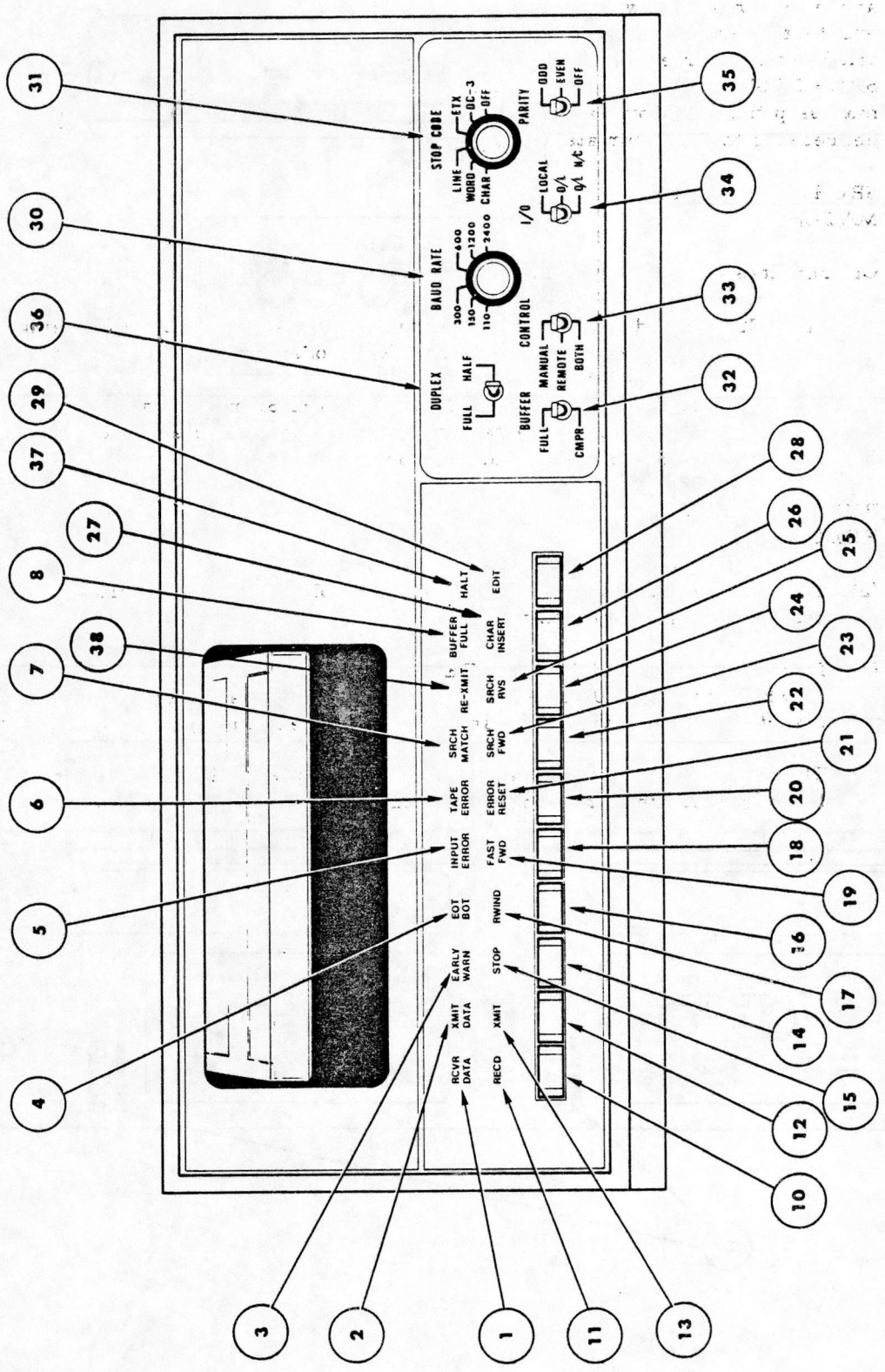
STOP CODE
ETX
DC-3
OFF
LINE
WORD
CHAR
PARITY
ODD
EVEN
OFF
I/O
LOCAL
0/1
0/1 W/C
BAUD RATE
300
150
110
1200
2400
DUPLEX
FULL
HALF
BUFFER CONTROL
MANUAL
REMOTE
BOTH
BUFFER
FULL
CMPR
HALT
EDIT
BUFFER FULL
CHAR INSERT
RE-XMIT
SRCH REV
SRCH MATCH
SRCH FWD
TAPE ERROR
ERROR RESET
INPUT ERROR
FAST FWD
EOT BOT
RWIND
EARLY WARN
STOP
RCVR DATA
XMIT DATA
RECD
XMIT
1
2
3
4
5
6
7
8
10
11
12
13
14
15
16
17
18
19
20
21
22
23
24
25
26
27
28
29
30
31
32
33
34
35
36
37
38

Figure 6

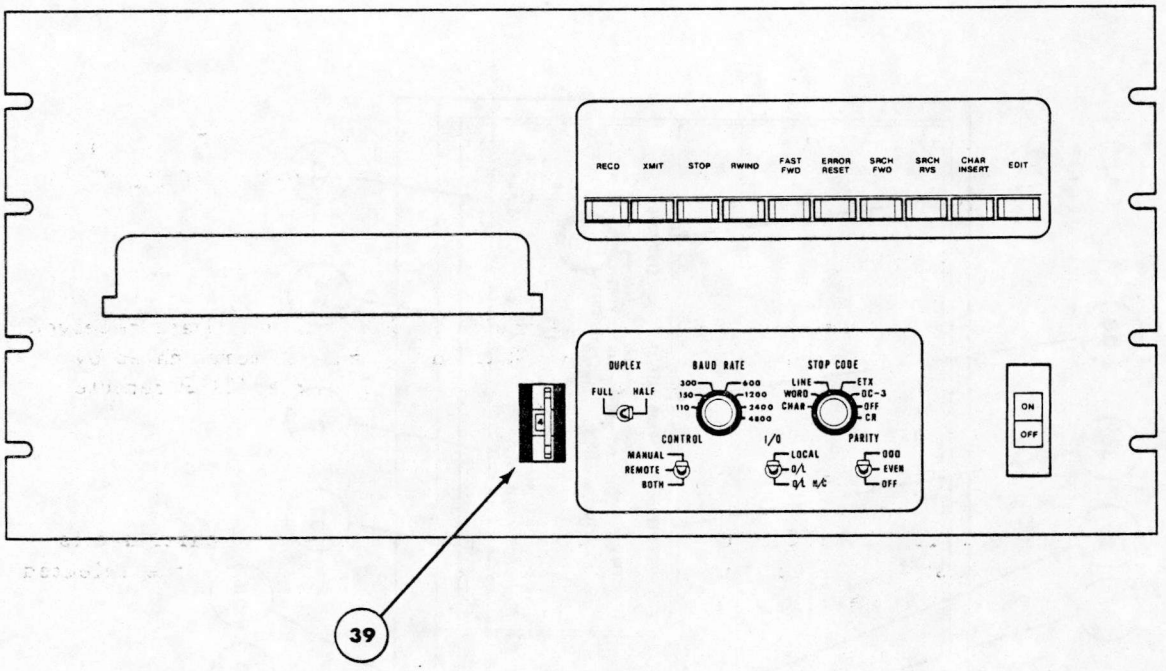
RECD
XMIT
STOP
RWIND
FAST FWD
ERROR RESET
SRCH FWD
SRCH RVS
CHAR INSERT
EDIT
DUPLEX
FULL
HALF
BAUD RATE
300
150
110
600
1200
2400
4800
STOP CODE
LINE
WORD
CHAR
ETX
DC-3
OFF
CR
CONTROL
MANUAL
REMOTE
BOTH
I/O
LOCAL
PARITY
ODD
EVEN
OFF
ON
OFF
39

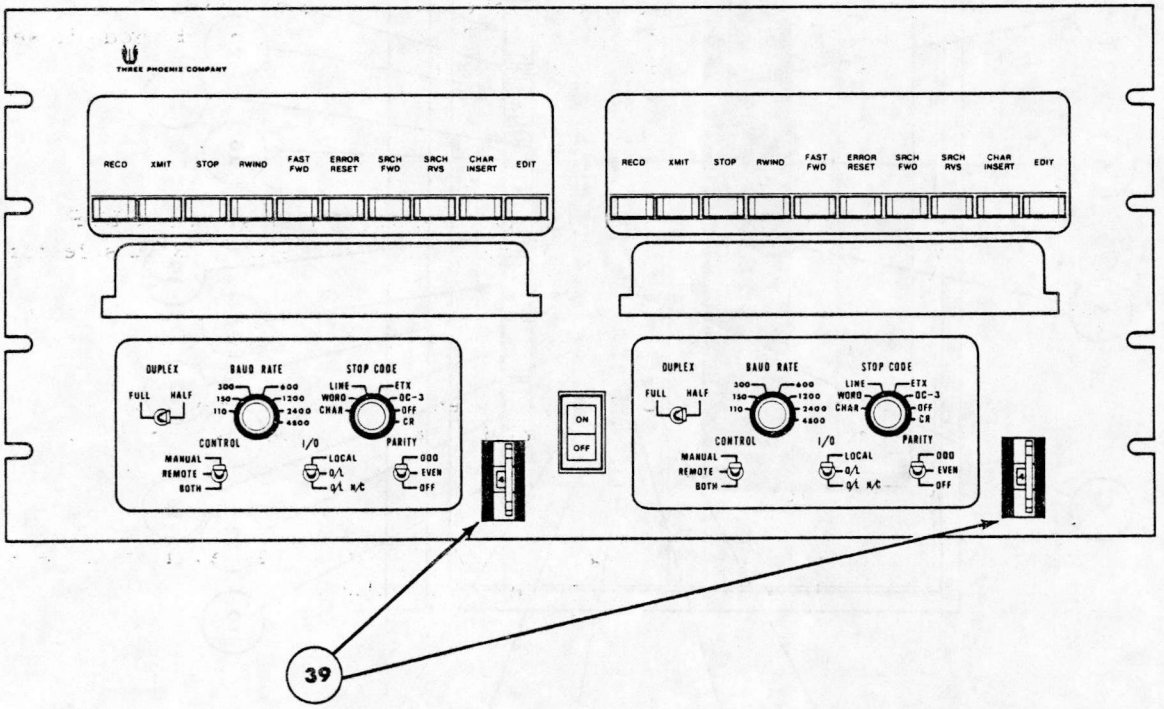
THREE PHOENIX COMPANY
RECD
XMIT
STOP
RWIND
FAST FWD
ERROR RESET
SRCH FWD
SRCH RVS
CHAR INSERT
EDIT
DUPLEX
FULL
HALF
BAUD RATE
300
150
110
600
1200
2400
4800
STOP CODE
LINE
WORD
CHAR
ETX
DC-3
OFF
CR
CONTROL
MANUAL
REMOTE
BOTH
I/O
LOCAL
PARITY
ODD
EVEN
OFF
ON
OFF
39

VII. OPERATOR PANEL CONTROLS AND MODE INDICATORS

CONTROL switch (33) must be in MANUAL or BOTH position in order to use the operator panel controls.

(10) RECD (switch)

Depressing this switch places the TCT300 in the RECORD mode providing a cartridge is installed and the cartridge Write-Lockout is not in the SAFE position.

(11) RECD (indicator)

On indicates that the TCT300 is in the RECORD mode. Data received will be written on tape. The RECORD mode may be terminated by depressing the STOP switch (14) or by receipt of the STOP remote control character sequence.

(12) XMIT (switch)

Places the TCT300 in the TRANSMIT mode providing a cartridge is installed. Data will be read from tape and transmitted at the selected baud rate.

(13) XMIT (indicator)

On indicates that the TCT300 is in the TRANSMIT mode. The TRANSMIT mode may be terminated by:

(a) Depressing the STOP switch (14)
(b) Receipt of STOP character sequence (remote control)
(c) detecting the selected STOP CODE on tape. The STOP mode is set after the STOP CODE is transmitted.
(d) sensing EOT

(14) STOP (switch)

Depressing this switch will terminate all other modes. The STOP switch is effective regardless of the position of the CONTROL selector (33).

(15) STOP (indicator)

On indicates that the TCT300 is stopped and that any previous mode has been terminated. The STOP mode is set when power is turned on.

(16) RWIND (switch)

This switch will cause the tape to be moved at high speed in the reverse direction, provided that a cartridge is installed.

(17) RWIND (indicator)

On indicates that REWIND mode has been initiated. Tape will move in the reverse direction at high speed until:

(a) the STOP switch is depressed,
(b) a stop character sequence is received (remote control)
(c) the BOT is sensed on tape. When BOT is found, the tape will be positioned forward to the LOAD POINT, the EOT/BOT indicator will be turned on, and the REWIND mode will be terminated.

(18) FAST (switch)
FWD

Depressing this switch will cause the tape to be moved in the forward direction at high speed, provided a cartridge is installed.

(19) FAST (indicator)
FWD

Indicates FAST FORWARD mode has been initiated and tape is moving at high speed in the forward direction. FAST FORWARD mode is terminated:

(a) depressing the STOP switch,
(b) receipt of stop character sequence (remote control),
(c) EOT mark is found on tape.

(20) ERROR (switch)
RESET

Causes the error indicators (5), (6), and (21) to be extinquished and resets the audible alarm.

(21) ERROR (indicator)
RESET

On Indicates that an INPUT or TAPE ERROR has occurred. This indicator will remain on until the ERROR RESET switch is pressed or a remote status inquiry character sequence is received (remote control).

(22) SRCH (switch)
FWD

Initiates SEARCH FORWARD mode, provided a cartridge is installed.

(23) SRCH
FWD (indicator) (feature 100 and 101)

On indicates that the TCT300 is in the SEARCH FORWARD mode. SEARCH FORWARD mode is terminated by:

(a) depressing STOP switch
(b) sensing the EOT mark on tape
(c) receipt of stop character sequence (remote control)
(d) a character corresponding to the STOP CODE selector switch position is detected on the tape. In this case the SEARCH MATCH indicator will also be turned on.
(e) a character sequence corresponding to the character sequence previously loaded into the Context Search buffer has been detected on the tape. In this case the SEARCH MATCH indicator will also be turned on.

(24) SRCH
RVS (switch) (feature 100 and 101)

Initiates SEARCH REVERSE mode, provided a cartridge is installed.

(25) SRCH
RVS (indicator) (feature 100 and 101)

On indicates SEARCH operation in reverse direction. SEARCH REVERSE will be terminated as in 23 above.

(26) CHAR
INSERT (switch) (feature 101 or 103)

(a) If in EDIT mode - initiates CHARACTER INSERT mode. (feature 103)
(b) Not in EDIT mode - clears buffer and initiates Context Search Argument Buffer loading. (feature 101).

(27) CHAR
INSERT (indicator) (feature 101 or 103)

(a) If in EDIT mode - indicates TCT300 is in CHARACTER INSERT mode. (feature 103)
(b) Not in EDIT mode - indicates Context Search Argument Buffer is conditioned for loading. Buffer loading is terminated by receipt of an ESC character, depressing the STOP switch, or depressing the CHAR INSERT switch a second time. (Feature 101)

NOTE: Context Search Argument Buffer may be cleared by depressing the CHAR INSERT switch twice.

(28) EDIT (switch)

Places TCT300 in EDIT and RECORD mode provided a cartridge is installed and the Write-Lockout is not in the SAFE position. If the TCT300 internal buffer is empty, a tape read cycle will be initiated. EDIT RECORD mode is used to modify previously recorded data.

(29) EDIT (indicator)

Indicates that TCT300 is in EDIT mode. The RECD indicator (11) will also be on. EDIT may be terminated by:

(a) depressing STOP switch,
(b) receipt of stop character sequence (remote control).

VIII. SETUP CONTROLS

The TCT300 setup controls are located on the front panel behind the hinged decorative door. (refer to figure 6)

(30) BAUD RATE

The BAUD RATE selector selects transmission speed in bits per second.

- 110 (10 cps)
- 150 (15 cps)
- 300 (30 cps)
- 600 (60 cps)
- 1200 (120 cps)
- 2400 (240 cps)
- 4800 (480 cps - Xmit Only)

(31) STOP CODE

The position of the STOP CODE SELECTOR switch determines the character or code which, when read from tape, terminates XMIT SEARCH FORWARD, and SEARCH REVERSE. Selector position and corresponding conditions are as follows:

POSITION	TERMINATES ON
CHARACTER	any character other than NUL
WORD	BLANK or SPACE character
LINE	LINE-FEED character
ETX	ETX character
DC-3	DC-3 control character
OFF	Disables STOP CODE selector
CR	Carriage Return character

The TCT300 stops on the character selected and the SEARCH MATCH indicator will be illuminated. There are no limitations on spacing of the STOP CODES. In the XMIT mode, the selected STOP character is transmitted. Transmission is then terminated, and XMIT is reset. Upon termination of a SEARCH FORWARD the character following the STOP CODE, in the forward position, is the first character available for transmission. Upon termination of SEARCH REVERSE, the selected STOP CODE is the first character available for transmission.

(32) BUFFER

BUFFER selector is effective during RECORD mode only.

FULL - data block will be written to tape for each 256 characters of input

CMPR - (compressed) data block will be written to tape for each 200 characters of input allowing space for an additional 56 characters to be inserted during an EDIT character insert operation.

(33) CONTROL

CONTROL selector position determines how TCT300 functions are activated.

MANUAL - control is accomplished by depressing push button switches on the operator panel only. In this position all characters will be treated as data.

REMOTE - control is by characters or character sequences present in input data from terminal or modem. In this position control characters or character sequences will not be treated as data. Operator panel switches have no effect.

BOTH - (on some machines this switch position is labeled OFF). Control is by either MANUAL or REMOTE method.

(34) I/O

INPUT/OUTPUT selector controls interface and data path.

LOCAL - TCT300 connected to Terminal Only

O/L - (ON LINE) TCT300 connected to both Terminal and Modem

O/L N/C - (ON-LINE NON-COPY) TCT300 connected to Modem Only

For detailed data path refer to figures 7 - 11.

(35) PARITY

I/O Data Parity Selector

ODD - TCT300 will generate ODD parity on output data and test ODD parity on input data

EVEN - TCT300 will generate and test for EVEN parity.

OFF - Parity is <u>not</u> tested. Parity Bit is transmitted as a <u>MARK.</u>

Figure 7

LOCAL

HALF-DUPLEX

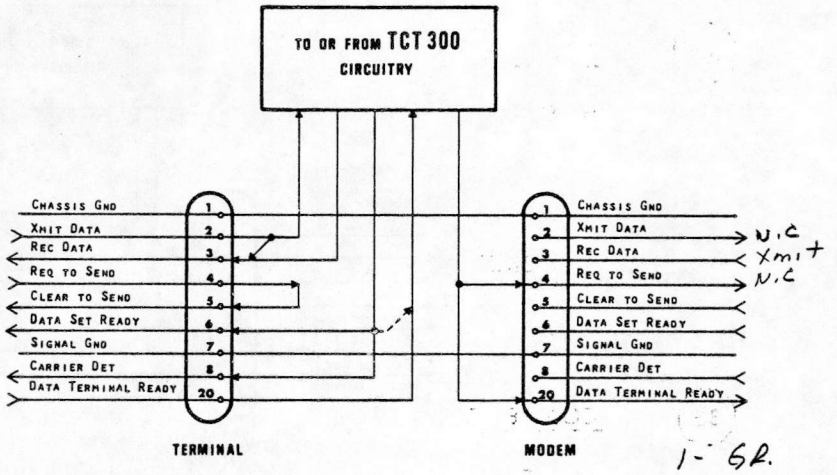

1- GR.

5-6-8

+ 12

7- 0 volt

FRt
1- GR
5-6-8 - together +12
7- 0 volts
3 - Xmit

1 - 3 - 7

ALL NEED

Figure 8

LOCAL

FULL DUPLEX

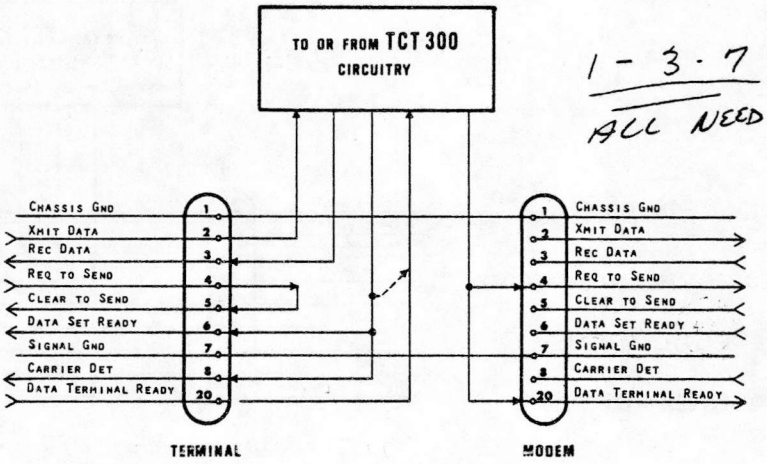

Figure 9

ON-LINE

FULL-DUPLEX

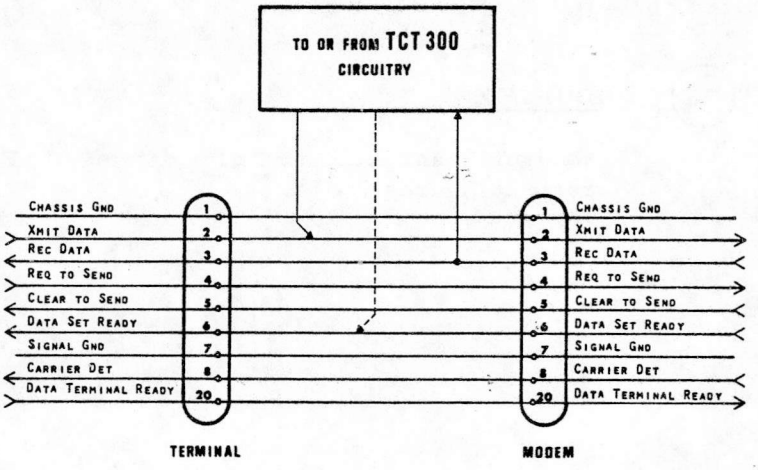

Figure 10

ON-LINE

HALF-DUPLEX

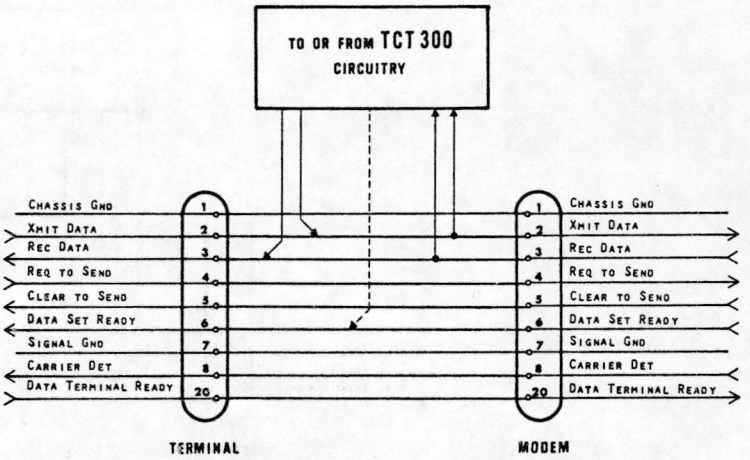

Figure 11

ON-LINE NON-COPY

FULL-DUPLEX

HALF-DUPLEX

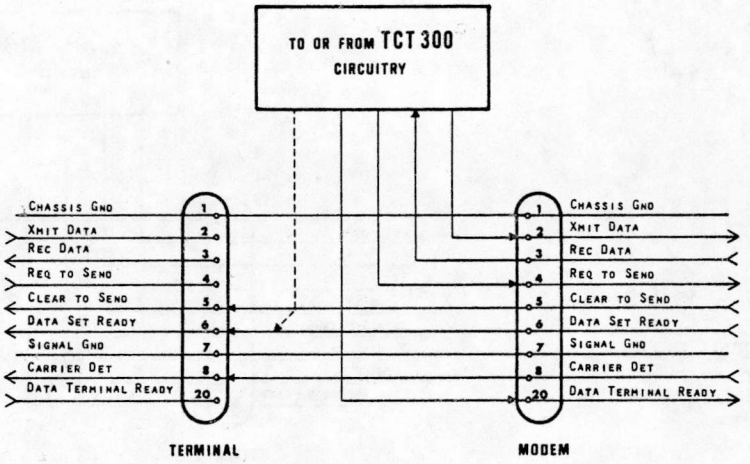

(36) DUPLEX

Controls transmit and receive data path. For detailed data path refer to figures 7 - 11.

IX. OPERATION

A. POWER ON

Apply power by depressing POWER-ON switch located on lower right base plate. When power is applied the TCT300 will be initialized to the STOP mode. The STOP indicator should be on.

B. CARTRIDGE INSERTION

The 3M DC300A cartridge or equivalent should be inserted into the TCT300 with the aluminum base plate down and the capstan toward the rear of the unit. To protect the cartridge from being accidently written, ensure that Write-Lockout is in the SAFE position.

NOTE: After the cartridge is inserted it should be rewound prior to recording or transmission. This will ensure proper tape tensioning as well as positioning to LOAD POINT.

C. CARTRIDGE EXTRACTION

Cartridge is removed by manual extraction. If the cartridge is removed before all data in the buffer has been written, the audible alarm will be activated and the data is lost.

D. REWIND

The tape cartridge may be rewound by depressing the RWIND switch (manual control) or receipt of rewind control character sequence. The tape cartridge will be rewound to BOT then the tape will be positioned forward to the LOAD POINT at which time the EOT/BOT indicator will be turned on. Upon reaching LOAD POINT the REWIND mode will be terminated. The REWIND speed is 90 inches per second. A full 300 foot tape cartridge may be rewound in approximately 40 seconds. The REWIND mode may be used for moving tape in the reverse direction at high speed and may be terminated at any time by depressing the STOP switch. In four track auto switching systems, the track select will be forced to track 1 (feature 109).

E. FAST FOWARD

The tape cartridge may be positioned to any point beyond the beginning of tape (BOT) by depressing the FAST FWD switch (manual control) or receipt of the FAST FORWARD remote control character sequence. FAST FORWARD speed is 90 inches per second and a full 300 foot tape cartridge may be positioned to the EOT in approximately 40 seconds. The FAST FORWARD mode may be terminated by depressing the STOP switch or by receipt of the STOP character sequence (remote control). When the tape reaches the EOT point the EOT/BOT indicator will be turned on, tape motion will stop, and in four track auto switching systems the track select will be forced to to track four (feature 109).

F. RECORD

The RECORD mode may be activated by depressing the RECD push button (manual control) or by receipt of the RECORD remote control character sequence. If RECORD mode is successfully activated the RECD indicator will be turned on.

NOTE: RECD mode will not be activated if the Write-Lockout switch on the tape cartridge is in the SAFE position.

In the RECORD mode characters received from either the Terminal or Modem will be collected in the TCT300 internal buffer. These characters will be written to tape when one of the following conditions occur:

(1) 256 characters have been received and the BUFFER selector switch is in FULL position

(2) 200 characters have been received and the BUFFER selector switch is in the CMPR position. In this case the remaining 56 character positions will be recorded as NUL (feature 103).

(3) A WRITE BUFFER character sequence is received (remote control).

(4) The RECORD mode is de-activated and another mode is entered that causes the tape to be moved, such as REWIND, FAST FORWARD, SEARCH, etc. In this case data will be written to tape prior to the new modes execution.

After the block of data is written to tape it is then read in the reverse direction and checked for errors. If tested error-free the tape is again positioned forward over the record ready to write the next block. In the event that errors are found, approximately 3" of tape is erased, the block is re-written, and the error checking is repeated.

If the cartridge is removed before the last partial buffer is recorded, the data will be lost and the audible alarm will be actuated.

If Feature 100 is installed, error correction during record mode may be accomplished by typing an ASCII can (cancel CTRL-X) character. This action causes the TCT300 to back up one character in the buffer. The TCT300 will Xmit the character and position the buffer for re-entry. This action may be repeated as many times as necessary to accomplish the correction.

G. TRANSMIT

The TRANSMIT mode is activated by depressing the XMIT push button (manual control) or receipt of the TRANSMIT remote control sequence. Data will be read from tape and transmitted at the selected baud rate to either MODEM, TERMINAL, or both depending on position of setup controls. (see figures 7 - 11). Transmission will continue until:

(1) a character has been transmitted that corresponds with the STOP code selector switch position at which time the search match indicator will be turned on and a brief tone will be heard from the audible alarm.

(2) the STOP push button is depressed.

(3) stop remote control character sequence is received.

(Transmit data format is shown in Figure 2)

At the 110 baud rate two stop bits are transmitted. At all other baud rates one stop bit is transmitted. The character parity depends on the position of the PARITY selector switch. All 128 possible characters in the ASCII character set may be transmitted except the NUL (if Feature 108 is installed the NUL will be transmitted). If the LINE-FEED DELAY (Feature 106) is installed, a 300 millisecond delay occurs following the transmission of a LINE-FEED character. In the TRANSMIT mode, data is checked for errors as it is read from tape. If an error occurs the tape is back-spaced and the record is re-read. This process will continue until a successful read is accomplished or until twenty re-tries have been attempted. After the twentieth read attempt the STOP mode will be entered and the ERROR RESET indicator will be illuminated. Depressing XMIT will initiate another twenty retries. If the tape record is not readable the operator may skip over the bad record by depressing the ERROR RESET switch and the XMIT switch simultaneously.

If the operator wishes to accept the bad record as is this may be done by holding the XMIT switch down and momentarily depressing FAST FORWARD switch.

In 4-Track Auto Switching mode, each track of the tape will be xmitted until Early Warning is encountered at which time the tape will be rewound to the load point and the next track will be selected. This continues until track 4 EOT is encountered at which time the EOT/BOT will be turned on.

H. SEARCH OPERATIONS (Feature 100 & 101)

SEARCH FORWARD or SEARCH REVERSE mode may be activated by depressing SRCH FWD or SRCH RVS switch on the control panel (manual control) or by receipt of SEARCH FORWARD or SEARCH REVERSE remote control character sequence. In the SEARCH mode, data is read from the tape into the TCT300's internal buffer where is is searched and compared with either of the following:

(1) the contents of the CONTEXT SEARCH argument buffer (feature 101), or

(2) if the CONTEXT SEARCH argument buffer is empty the data is compared with a character defined by the STOP CODE selector.

Searching continues until a match is found at which time the STOP mode is set. The SEARCH MATCH indicator is turned on and a brief tone is produced by the audible alarm. If this was a SEARCH FORWARD, the tape is positioned so that the next character available for transmission is the character following the character (or characters) causing the MATCH condition.

In the case of SEARCH REVERSE the tape is positioned so that the next character available for transmission or search is the first character causing the MATCH condition.

In the event that no data match occurs, searching will continue until the STOP switch is depressed, the STOP remote control character sequence is received, or EOT/BOT is reached. The data searching rate is approximately 2400 characters per second. CONTEXT SEARCHING may be at a slower rate depending on the complexity of the search argument.

To load the CONTEXT SEARCH argument buffer the following procedure must be used:

(1) depress the CHAR INSERT switch

(2) CHAR INSERT indicator will illuminate. When the CHARACTER INSERT mode is entered and the TCT300 is not in the EDIT mode, any data received will be loaded into the CONTEXT SEARCH argument buffer (16 characters max.). If an attempt is made to load more than 16 characters into the search argument buffer, the BUFFER FULL indicator will be turned on.

(3) depress CHAR INSERT switch again or depress STOP switch. The CONTEXT SEARCH buffer will remain loaded until it is cleared or power is removed.

NOTE: The CONTEXT SEARCH argument buffer is used only for search functions and is not used to terminate the transmit mode. To clear the CONTEXT SEARCH buffer, depress CHAR INSERT switch twice in succession.

I. EDIT (Feature 102)

The EDIT mode is used to modify, delete, or add to previously recorded data. The EDIT mode is activated by depressing the EDIT push button (manual control) or by receipt of the edit remote control character sequence. Entering the EDIT mode will also cause the RECD indicator to be turned on. The EDIT mode cannot be entered if the Write-Lockout mechanism on the tape cartridge is in the SAFE position.

If EDIT mode is entered and the TCT300's internal buffer is empty the next block will be read into the buffer. In the event a blank tape was installed, tape would move in the forward position until either the STOP mode is set or EOT is reached. EDIT mode presumes that data has been previously recorded. In the EDIT mode, characters may be modified by overstriking; characters may be deleted by overstriking with the NUL character, and characters may be added through the use of the CHARACTER INSERT feature 103 (if the data was recorded in the BUFFER COMPRESSED mode).

NOTE: In the EDIT mode, data may not be accepted by the TCT300 at the higher baud rates due to the fact that when the internal buffer is full it must be re-written to tape and the next block of data read into the buffer in order to continue the editing process. This interval of time is sufficiently long that an INPUT ERROR (due to over-run) may occur.

J. CHARACTER INSERTION (Feature 103)

The CHARACTER INSERTION feature of the EDIT option provides the ability to add characters to previously recorded data. This can only be accomplished if the data was previously recorded in the BUFFER COMPRESSED mode. The CHARACTER INSERT mode must be entered after the EDIT mode is entered. The CHARACTER INSERT mode is activated by first depressing the EDIT switch (manual control), and then depressing the CHAR INSERT switch, or receipt of the edit remote control character sequence followed by the character insert remote control character sequence. If the data was previously recorded in the buffer compressed mode, up to 56 characters may

be inserted at any point. The following example illustrates the use of the character insert feature:

(1) SEARCH FORWARD or REVERSE to position tape where character insertion is desired

(2) activate EDIT mode

(3) activate CHARACTER INSERT mode

(4) Data received at this point will be inserted after the SEARCH MATCH location. If an attempt is made to insert more than 56 characters per block, the BUFFER FULL indicator will be illuminated. Any characters received after this time will be ignored. To reset the BUFFER FULL indicator the STOP mode must be entered.

The CHARACTER INSERT mode may be terminated by:

(a) depressing the STOP switch,

(b) depressing the CHAR INSERT switch a second time,

(c) receipt of a second character insert remote control character sequence.

NOTE: Depressing the STOP button or receipt of the stop remote control character sequence will also terminate the EDIT mode.

Bit	7	6	5	4	3	2	1	0
	Parity Bit	Cartridge In	Write Lockout	Search Match	Input Error	Tape Error	Early Warn	EOT BOT

Figure 12

K. REMOTE CONTROL

The following functions may be controlled either from the operator's panel or by receipt of control characters from either the Data Terminal or Modem. Mode selection is accomplished by the three-position CONTROL selector switch.

In the MANUAL position these functions are controlled by depressing one of the function control switches.

In the REMOTE control position control may be accomplished by receipt of control characters from either the Data Terminal or Modem. These control characters are as follows:

FUNCTION	CHARACTER SEQUENCE (remote control characters)
XMIT	DC1 or ESC X
STOP (RESET XMIT)	DC3 or ESC S
RECORD	DC2 or ESC R
STOP (RESET RECORD)	DC4 or ESC S
REWIND	ESC B
FAST FORWARD	ESC F
SEARCH FORWARD	ESC >
SEARCH REVERSE	ESC <
LOAD COMPARE REGISTER	ESC L (1-16 characters) ESC
CHARACTER INSERT MODE	ESC I
EDIT	ESC E
ERASE (record mode)	ESC C
WRITE BUFFER (record mode)	ESC W
REQUEST STATUS	ESC ?
REMOTE PROGRAM LOAD	ESC (CONTRL-L), Program, ESC
SELECT TRACK	ESC T(#)

An alternate version of the Remote Control feature uses the DLE (Data Link Escape) character instead of the ESC character.

WRITE BUFFER

Data contained in the Data Buffer will be written on tape upon receipt of the WRITE BUFFER control character in the REMOTE CONTROL mode.

ERASE

Approximately 3.2 inches of tape (equivalent to one 256-character record) is erased upon receipt of the ERASE control character in the REMOTE CONTROL mode.

REMOTE STATUS INQUIRY

In the REMOTE CONTROL mode a REQUEST STATUS (ESC ?) character sequence will cause the TCT300 to respond with a character whose bit configuration describes its status. Figure 12 defines the various status responses. (See figure 2 for definition of ASCII Character set).

L. OTHER OPERATIONS

(1) High Speed Tape Erase

Tape may be erased manually by pressing the holding error reset and stop switches down, then record switch. This action will cause any partial buffer to be written and then begin erasing tape at 90 IPS until the switches are released or until the EOT is encountered. If the cartridge is in the SAFE position, this operation will be ignored.

(2) Write Stop Code

A stop code may be written into the buffer by holding the RECORD switch down and momentarily depressing the stop switch. This action will cause one of the following selected stop codes to be written:

Stop Code Selector Position	Character Written
CHAR	NONE
WORD	Space (Blank)
LINE	Line Feed
ETX	Etx (Cntrl-C)
DC-3	DC-3(X Off, Cntrl-X)
OFF	NONE
CR	Carriage Return

This action may be repeated as many times as desired.

(3) Load Program or Test Tape

Other control programs may be loaded into the TCT300 memory for execution by holding Error Reset and Stop switches down and momentarily depressing the Xmit switch. This action causes the first block of a tape to be read. This block may be a bootstrap loader that when executed will load subsequent data into RAM memory.

This capability is used by the TCT300 test program tape to load various self test programs into memory for execution. Other special purpose control programs may be loaded in this manner.

(4) Remote Bootload

Test and other programs may be loaded into the TCT300 RAM Memory by the remote bootload method. This method utilizes the RS232 interface. The remote bootload may be initiated by one of two ways:

(a) For systems with Remote Control feature: Remote Control sequence; ESC, FF (Control-L) followed by the program to be loaded followed by ESC.

(b) For systems without remote control feature: Remove tape cartridge from the drive then depress error reset, stop, and xmit switches simultaneously. The program may then be received through the terminal or modem RS232 interface.

The remote bootload feature may be used for remote testing or for other special purpose program loading.

X. OPTIONAL FEATURES

A. Feature 100 - Basic Search

The Basic Search feature provides high speed forward or reverse search for one of the following characters:

Space (Blank)
Line Feed
Carriage Return
ETX
DC-3 (X Off)

or, Single Step by Character (See Section IX, paragraph H for operation)

B. Feature 101 - Context Search

The Context Search feature expands the search capability of the TCT300 to allow for character "Strings" or sequences of 1 to 16 characters in length. (See Section IX, paragraph H).

C. Feature 102 - Edit

The Edit feature provides the capability to modify or delete previously recorded data. Edit is a modified form of the Record mode. To change a character or series of characters, the tape must be positioned (using Search or Xmit) to the first character position requiring modification. The Edit mode is then entered by depressing the Edit switch or a remote control sequences. Subsequent characters received will "Overlay" the previously recorded characters in the buffer. When the end of the buffer is reached, the TCT-300 will automatically update the block on tape. The new block will be recorded in exactly the same position on the tape as the old block was and will be verified for no errors. (See Section IX).

D. Feature 103 - Character Insert

The Character Insert feature expands the Edit capability of the TCT300 to allow adding characters to previously recorded data (up to 56 per clock of 200). This is accomplished by initially recording the tape in the Buffer Compressed mode. In this mode, 200 character blocks will be written with 56 NUL positions in each block. Later, when Editing the tape, the Character Insert mode may be entered and up to 56 characters may be inserted anywhere in the block. (See Section IX).

E. Feature 104 - Remote Control

This feature allows the TCT300 to be controlled by characters or character sequences received through the RS232 interface. (For operation see Section IX). In addition the Remote Control feature provides two additional commands (Write Buffer and Erase Block) as well as a remote Status Inquiry.

F. Feature 105 - Remote Control Version 2

This feature provides the same capability as feature 104 except that the "DLE" (Data Link Escape) character is used as the control initiator instead of the standard "ESC" (Escape) character. This allows interfacing with other devices that use conflicting "ESC" character control sequences.

G. Feature 106 - Line Feed Delay

This feature provides approximately 300 MS delay or pause following transmission of each Line Feed character during XMIT mode. This time delay allows certain mechanical printers and other terminal devices sufficient time to complete their mechanical operations. Feature 106 may be disabled by a jumper on the I/O PWB.

H. Feature 107 - Message Error Checking

This feature provide a communications protocol necessary to check and Re-Xmit a data block or message. Thereby overcoming errors that may result from less than perfect communications lines.

This feature uses the Stop Code as an End of Message character and generates a Block Check Character (BCC) on each message transmitted. This BCC is tested by the receiving end and the message is acknowledge by replying with an "ACK" character. If the receiving end receives a bad message, it will reply with a "NAK" character. When the TCT300 receives the "NAK" character, the tape is backed up to the previous stop code and the message is re-transmitted. This action ensures that the receiving end has received error-free data.

Two TCT-300's may be used, one at each end of a communications link to transmit data free from errors that might otherwise result from communications noise etc.

This communications protocol is compatible with other terminals and computer systems to numerous to mention. A functional flow diagram of feature 107 Message Protocol is illustrated in Figure 13. Feature 107 is effective only in the REMOTE or BOTH positions of the "CONTROL" switch (33).

I. Feature 108 - 8-Bit Transparency

This feature allows all 8-Bits of incoming data to be recorded on tape even if all bits are zeros. This allows Record/Playback of binary information such as might be needed for program loading of mini or micro-computers and other equipment.

Because all zeros (MUL characters) is considered valid data, this feature is not compatible with feature 103 (Character Insert). NULS are ignored in machines not equipped with feature 108.

Care must be taken when using feature 104/105 with feature 108 to disable remote control mode while recording binary data because the data may be interpreted as Remote Control commands. In machines equipped with 8-Bit Transparency mode the CNL-X Cancel Char (delete previous character) is not effective as CTL-X may also appear valid binary data.

Feature 108 may be disabled by a jumper option on the I/O PWB. See Section

J. Feature 109 - Auto Track Switching

This feature is used in conjunction with feature 204 (4-track drive) to provide an automatic rewind and switch to next track. When equipped with feature 104/105 track selection may also be accomplished remotely.

Manual track selection is accomplished by setting the track selector switch to positions 1, 2, 3, or 4. If the switch is set to position "0" the track selection will be automatic beginning with track 1 when a cartridge is initially installed or rewound.

In Record mode, when Early Warning is encountered, the TCT300 automatically erases to the EOT, rewinds the tape to BOT, switches to the next high track number, erases to the Load Point and then resumes the Record operation. During this time (approximately 40 seconds) the (CTS) Clear to Send signal (Terminal Connector) and (DTR) Data Terminal Ready signal (Modem Connector) are turned off signifying the TCT300 is busy and not able to receive data. However, up to 256 characters (or 200 in CMPR Buffer Mode) may be received during this time with no loss of data. If the TCT300 is on track 4, the record operation continues to EOT where the normal EOT action occurs.

In Xmit or Search Fwd mode, when the Early Warning point is encountered the tape is automatically rewound, the next track in sequence is selected, and the Xmit or Search continues. If Early Warning is encountered on track 4, the recording continues to EOT where normal EOT action occurs.

In Search Reverse mode when BOT is encountered, the tape is moved fast forward to EOT. Track number is decremented and Search Reverse continues. If BOT is encountered on track 1, normal BOT action occurs.

In the Rewind mode, then BOT is encountered, the Track Select is automatically set to track 1.

In Fast Forward mode, when EOT is encountered, the Track Select is automatically set to track 4.

If Remote Control feature 104/105 is installed, track selection may be accomplished remotely by the sequence: ESC, "T", Track # (1-4).

The track number will also be included in the response to a remote status inquiry (ESC "?"). The response is as follows:

(Status Word) Track # (1-4) Example

Remote Control Sequence	TCT300 Responds
(ESC)?	(Status Char) 2
(ESC)T4	(Switch to Track 4)
(ESC)?	(Status Char) 4
(ESC)B	Rewind and Switch to Track 1
(ESC)?	(Status Char) 1

If Track Selector switch is in position 1, 2, 3, or 4 the ESC T will have no effect. However, the ESC? will respond with the track # corresponding to the switch setting.

K. Feature 200 - 20 MA Current Interface

This feature provides a current interface for 20 MA Loop devices. The following additional signals appear on the terminals interface connector.

Pin 18	- 20 MA Terminal Xmit Data
Pin 19	+ 20 MA Terminal Xmit Data
Pin 17	- 20 MA Terminal Recv Data
Pin 11	+ 20 MA Terminal Recv Data

Feature 200 may be disabled with a jumper on the I/O PWB.

L. Feature 201 - Modem Interface 202D

This feature provides a Request To Send signal (Pin 4) to the Modem interface when On-Line and in Xmit mode. No data will be transmitted until the modem responds with Clear To Send (Pin 5) signal.

M. Feature 202 - Parallel I/O Interface

This feature provides an 8-Bit Parallel I/O Bus Interface in addition to the RS232 serial interface. This interface is TTL compatible and is used through a 34-pin 3M flat cable connector located on the rear panel.

Interface signals are as follows:

CABLE PIN#	LOGIC NAME	REMARKS
1	TCT Enable Address	Must be held high
2	$\overline{\text{TCT Command}}$	Command LSB
3	$\overline{\text{TCT Command}}$	Command MSB
4	$\overline{\text{TCT Enable}}$	Must be held low
5	$\overline{\text{TCT Address}}$	Address LSB
6	$\overline{\text{TCT Address}}$	Address MSB
7	NC	
8	NC	
9	Data in Bit 0	
10	Data in Bit 1	
11	Data in Bit 2	
12	Data in Bit 3	Input data is latched by trailing edge of write command
13	Data in Bit 4	
14	Data in Bit 5	
15	Data in Bit 6	

CABLE PIN#	LOGIC NAME	REMARKS
16	Data in Bit 7	Input data is latched by trailing edge of writing command
17	Logic GND	
18	NC	
19	NC	
20	NC	
21	NC	
22	$\overline{\text{Status Bit 4}}$	Low if TCT in 110 baud
23	$\overline{\text{Status Bit 5}}$	Low if data ready on output lines
24	$\overline{\text{Status Bit 6}}$	Low when TCT ready to accept data
25	$\overline{\text{Status Bit 7}}$	Low if TCT in odd parity
26	Data out Bit 0	
27	Data out Bit 1	
28	Data out Bit 2	
29	Data out Bit 3	Output data lines tri-state drive
30	Data out Bit 4	
31	Data out Bit 5	
32	Data out Bit 6	
33	Data out Bit 7	
34	Logic GND	

NOTE: Command input lines:

Pin 2	Pin 3	Command
L	L	Disable parallel interface
L	H	Write
H	L	Read
H	H	Enable status

The commands to the interface are as follows:

Enable Status Command

Enables TCT300 whose address appears on address lines. Input registers are armed and output lines are connected to tri-state bus. The first Enable Command to a given TCT disables the RS232 interface which will remain disabled until a "Disable" command is issued.

Disable Command

Disables TCT300 parallel interface, and enables RS232 interface.

Write Command

Addressed TCT appears input data and latches it on trailing edge. Each Write Command should be followed with an Enable Status Command to ensure properly latched data and resetting of input and data bus ready flag (Status Bit 6).

Read Command

Resets output data ready flag and allows TCT to place next character (if any) on output bus. All input lines are pulled up to +5 volts through 1K resistors. All output lines (status and data) are tri-state drivers. Up to four TCT300's may be connected to parallel interface bus, each with a unique address (0-3).

This interface does not replace the RS232 interface. However, the two interfaces cannot be used simultaneously.

N. Feature 203 - External Alarm Control

This feature provides a relay contact closure for operating an external alarm device. The relay contacts close if one of the following occurs:

(1) Power Failure

(2) EOT or EW indicators are on

(3) CPU HALT occurs

(4) Any mode other than Record is activated

(5) Stop mode is entered

(6) Input Error or Tape Error indicators are on

The relay contacts will handle up to 250 ma dc current. The contacts are connected to pins 11 and 12 of the modem connector.

O. Feature 204 - 4-Track Drive

This features provides a 4-track drive and Track Selector switch which extends the total storage capacity of each cartridge to 1.2 megabytes. The track select switch has four positions for selecting track 1, 2, 3, or 4, and one position for use with Auto Track Switching, Feature 109. Tape written on systems without feature 204 may be read by selecting track 1.

XI. OPERATOR'S CARE AND MAINTENANCE

The TCT300 is designed for a minimum amount of maintenance. The READ/WRITE head should be cleaned periodically with a cotton swab soaked in isoprophyl alcohol. Do not use any instrument that may scratch the READ/WRITE head. The actual frequency of cleaning depends on use. (Normally after each 100 passes of the tape).

The TCT300 bezel and rear cover may be cleaned with a mild household detergent such as Mr. Clean, 409, etc.

CAUTION: DO NOT USE FURNITURE WAXES OR ANY OTHER SOLUTIONS THAT COULD CAUSE CONTAMINATION OF THE TAPE.

XII. MAINTENANCE PHILOSOPHY

The TCT300 is designed and packaged to allow field replacement of all major subassemblies. The subassembly replacement approach to corrective maintenance minimizes both equipment down time and interference with the user's operation. Repair of the TCT300 can be accomplished by personnel with a minimum of technical understanding. However, the maintenance personnel should be intimately familar with the TCT300 operation. Defective subassemblies will be repaired or replaced by the factory or repair depot for a nominal fee. Field maintenance can be accomplished with a minimum of tools and test equipment.

Care should be taken that replacement subassemblies are optioned exactly as the subassembly being replaced (see Section XV).

A Test Program and Standard Tape is available for maintenance purposes. See Appendix B.

CAUTION

The TCT300 contains voltages that may be hazardous. The TCT300 should be disconnected from the AC power before removing the rear cover.

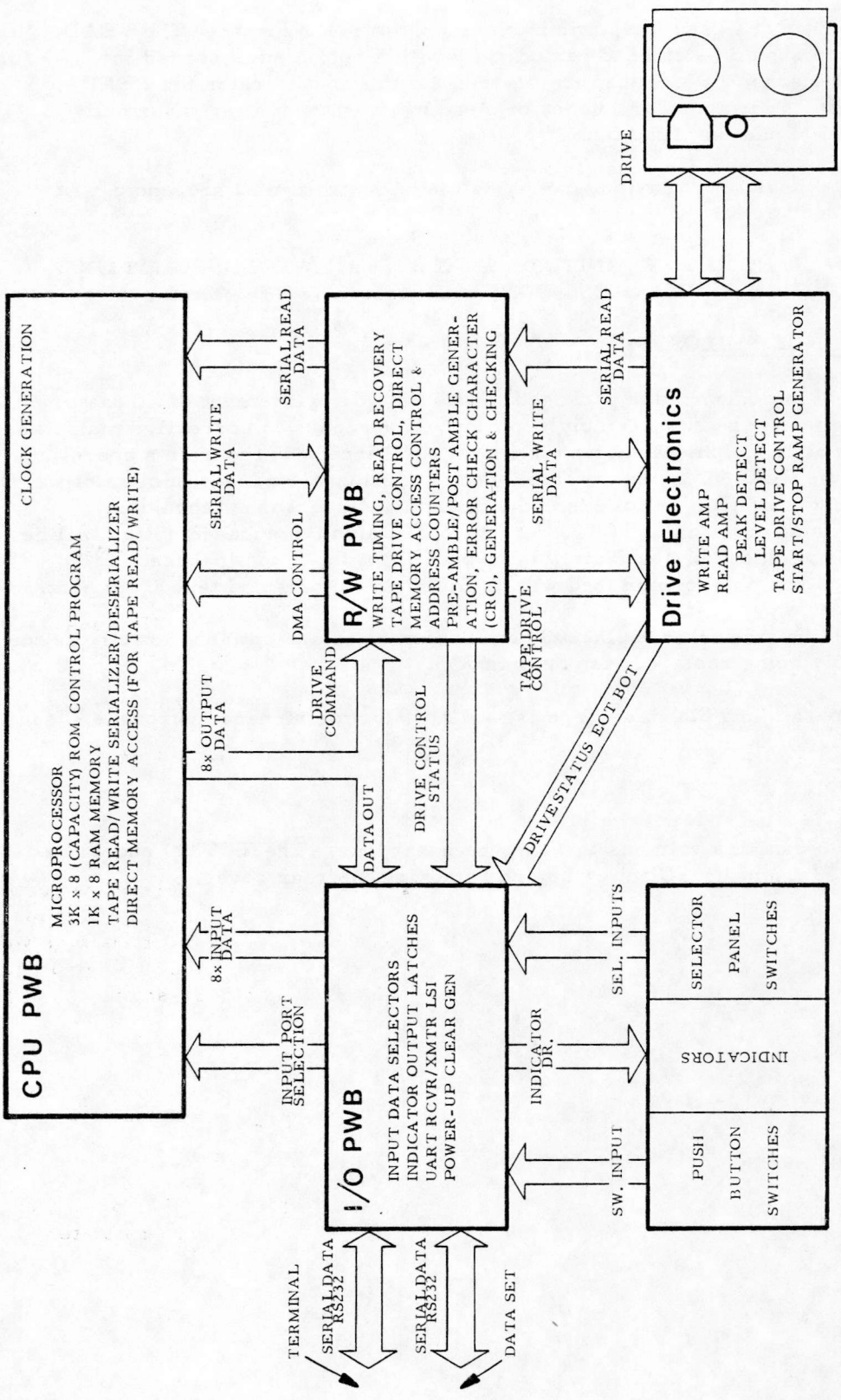

TCT300 Major Block Diagram

XIII. THEORY OF OPERATION

For purposes of explanation the TCT300 may be divided into 10 major sub-assemblies:

1. Power Supply
2. Tape Drive
3. Drive Control PWB
4. Read/Write Preamp PWB
5. Switch Indicator Panel
6. Selector Panel
7. CPU (Central Processing Unit) PWB
8. R/W (Read/Write) PWB
9. I/O (Input/Output) PWB
10. Chassis and Interconnect Wiring

A brief description of each subassembly follows: (refer to Figure 14)

1) Power Supply

The TCT300 power supply provides all regulated DC voltages used in the TCT300. These voltages are +5V, -9V, +12V, +18V, -18V. Voltage values are preset by component selection at the factory and require no adjustment in the field. The TCT300 power supply has built in over voltage protection. Current limiting is accomplished by 3 AMP fuses on the +18V and -18V supply, 6 AMP fuse on the +5V supply, and by automatic current limiting in the I. C. regulators.

The TCT300 power supply can be replaced as a complete assembly by disconnecting three connectors and removing the six screws holding it to the TCT300 chassis.

2) Tape Drive

The TCT300 Tape Drive can be replaced as an entire assembly by removing the bezel and four screws holding the drive assembly to the TCT300 chassis. Care should be taken when removing the two connectors so that the pins will not be damaged. The Read-after-Write head may be replaced by removing two screws fastening it to the drive. No adjustment is necessary.

3) Drive Control PWB

The Drive Control PWB contains that circuitry necessary for starting and stopping the drive motor and the tape speed monitoring circuits.

There are four adjustments located on this PWB. These adjustments are set at the factory and should not be changed unless the PWB or Drive Motor is replaced;in the event adjustment becomes necessary refer to Section XVI for adjustment procedure.

The signals from the BOT/EOT photocell circuits are connected to this PWB and are passed on to the I/O PWB.

4) Read/Write Preamp PWB

The Read Write Preamp converts the digital write data from the Read/Write PWB to analog circuits necessary for driving the Write head. Also the low level analog signals from the Read head are amplified and converted to digital signals for use on the Read/Write PWB.

5) Switch Indicator Panel

This subassembly contains the ten operator function control switches, mode indicators, and lamp drivers. The switches are solid state "Hall-effect switches" and are connected to the I/O PWB via "Scotch-flex" flat cable. Depressing a switch presents a DC level to the I/O PWB which is connected to the Input/Output PWB. These signals are "read" by the control program and are acted upon accordingly. No actual connection exists between each mode control switch and its corresponding mode indicator. Each indicator lamp driver is connected to the I/O PWB and appears as an output port to the micro-computer located on the CPU PWB. The state of each lamp is controlled by the program running in the CPU.

6) Selector Panel

These switches are connected via "Scotch-flex" cable to the I/O PWB and appear as input ports to the micro-computer located on the CPU PWB. The control program running in the CPU can "sense" these switches by examining the proper input port.

7) CPU (central processing unit) PWB

The CPU PWB is the heart of the TCT300 controller. All functions are actually controlled by a program running in the micro-computer located on the CPU PWB. The CPU PWB also contains the read only memory (ROM) and the random access read/write memory (RAM) and associated circuitry. The control program is permanently stored in the ROM and is non destructive. The amount of ROM storage depends on the particular option configuration of the TCT300.

Each function of the TCT300 (record, xmit, etc.) is controlled by the program sub-routine running in the CPU. For example, pressing the REWIND switch on the operator/switch indicator panel sends a DC signal to the Input/Output (I/O) PWB where it is presented to the CPU PWB. When the control program senses the transition of the rewind switch from OFF to ON a sub-routine is executed: 1)checks the cartridge present switch, 2) if a cartridge is present it will send a control signal to the Read/Write PWB that will cause the tape drive to be run reverse at high speed. This sub-routine is repeated until the program detects the BOT holes in the tape. The Read/Write PWB is then given a command to move tape forward until the presence of the Load Point hole is detected. During the rewind operation the control program is performing other tasks such as: watching for the STOP function switch or characters to appear on the input side of the receive data buffer (UART located on the I/O PWB) etc.

8) Read/Write (R/W) PWB

The R/W PWB contains the logic necessary to control tape movement and formatting of data on tape.

Commands are issued from the CPU PWB to the R/W PWB. These commands define the direction and speed of tape movement, and the source or destination of data in RAM. Status is presented to the CPU PWB through the I/O PWB describing the condition of the tape drive and the results of command execution.

Typical command execution sequence is as follows: (Write Data)

- Start tape motion turn on write current
- Delay to allow tape acceleration (33 ms)
- Delay to allow speed stabilization (10 ms)
- Write preamble (15 zeros followed by one)
- Sequentially access RAM and serialize data to be written to tape. As each bit is formatted, generate 16 bit polynomial for CRC. Total of 256 x 8 bits.
- Write 16 bit polynomial CRC
- Present "command complete" status to CPU
- Delay to allow read head gap to clear data (20 ms)
- Begin tape deceleration
- Delay to allow tape to stop (33 ms)
- Turn off write current

During the Read or Write Data Command Execution the R/W PWB accesses RAM through the DMA located on the CPU PWB. These accesses are interleaved with memory accesses by the micro-computer. This allows the program to accept characters and store them in another area of RAM while a previously collected block of characters is being written.

If during a read or read verify command the R/W PWB detects an error, the error status is presented to the CPU PWB at the end of command execution. Error retry and recovery is then accomplished by the control program.

9) Input/Output (I/O) PWB

The I/O PWB contains logic necessary to interface the CPU PWB with other subassemblies.

Switch inputs from both the switch/indicator panel and the selector panel are connected to the I/O PWB where they are multiplexed with other inputs such as received data and tape drive status. The multiplexed data is presented to a command data bus where it appears as input ports to the micro-computer located on the CPU PWB.

Micro-computer output ports are connected to the I/O PWB where the various output devices such as the indicator drivers are also connected.

The I/O PWB contains the UART (Universal Asynchronous Receiver Transmitter) LSI chip. the UART buffers, serializes, and deserializes data received or transmitted to the RS232 interface. The UART also provides I/O data formatting and parity generation/checking.

If feature 202 is installed, a "Piggy-Back PWB" is plugged into the UART socket. This "Piggy-Back" PWB contains the necessary circuitry for the parallel interface as well as a UART for use with the RS232 interface.

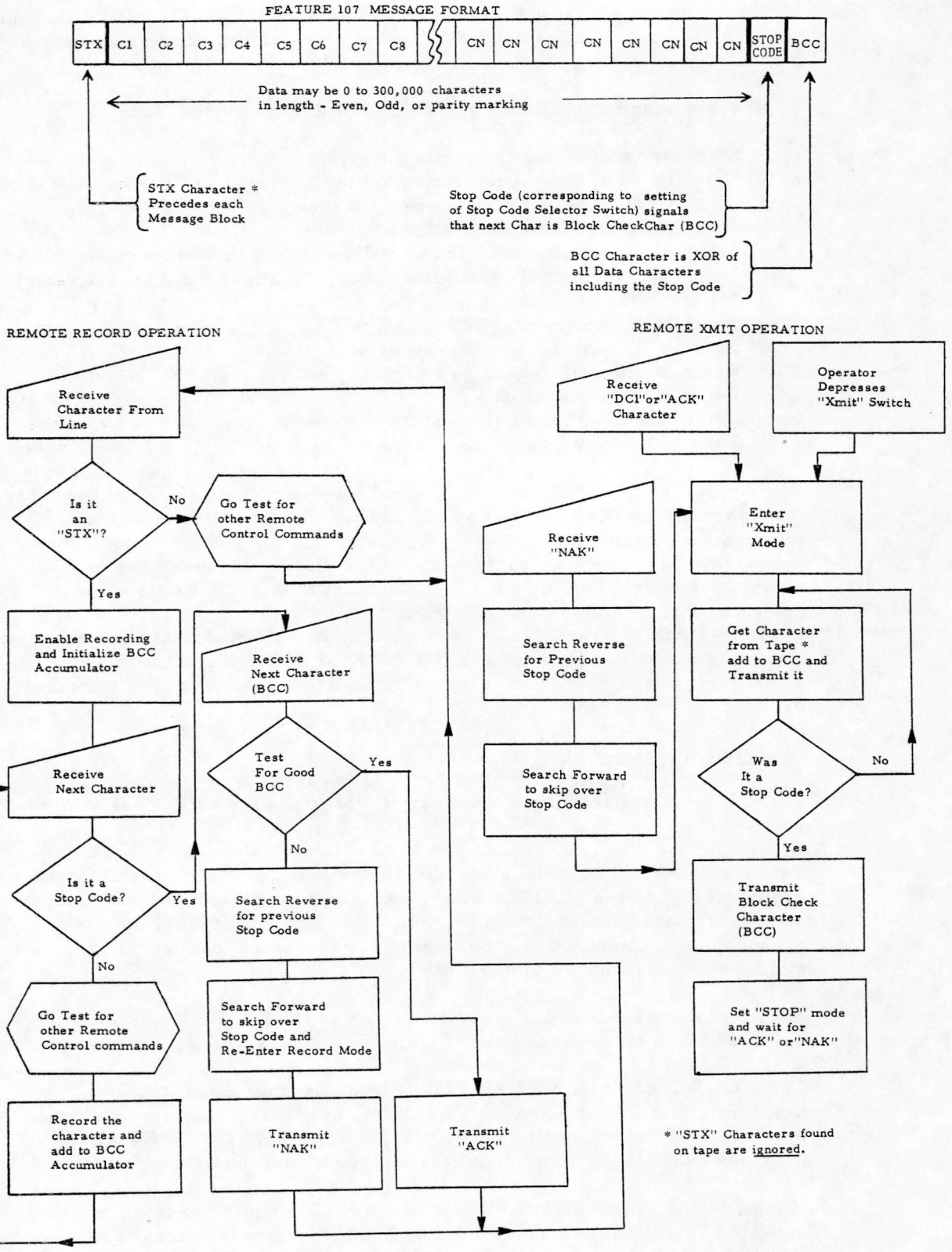
FEATURE 107 MESSAGE FORMAT
STX
C1
C2
C3
C4
C5
C6
C7
C8
CN
CN
CN
CN
CN
CN
CN
CN
STOP CODE
BCC
Data may be 0 to 300,000 characters in length - Even, Odd, or parity marking
STX Character * Precedes each Message Block
Stop Code (corresponding to setting of Stop Code Selector Switch) signals that next Char is Block CheckChar (BCC)
BCC Character is XOR of all Data Characters including the Stop Code
REMOTE RECORD OPERATION
Receive Character From Line
Is it an "STX"?
No
Go Test for other Remote Control Commands
Yes
Enable Recording and Initialize BCC Accumulator
Receive Next Character
Is it a Stop Code?
Yes
No
Go Test for other Remote Control commands
Record the character and add to BCC Accumulator
Receive Next Character (BCC)
Test For Good BCC
Yes
No
Search Reverse for previous Stop Code
Search Forward to skip over Stop Code and Re-Enter Record Mode
Transmit "NAK"
Transmit "ACK"
REMOTE XMIT OPERATION
Receive "DCI"or"ACK" Character
Operator Depresses "Xmit" Switch
Receive "NAK"
Enter "Xmit" Mode
Search Reverse for Previous Stop Code
Search Forward to skip over Stop Code
Get Character from Tape * add to BCC and Transmit it
Was It a Stop Code?
No
Yes
Transmit Block Check Character (BCC)
Set "STOP" mode and wait for "ACK" or"NAK"
* "STX" Characters found on tape are ignored.

Figure 14

XIV. CONTROL PROGRAM

The TCT300 controller is actually a micro-computer in which a special program is executing. This program is initially stored into read only memories at the factory and is non-destructive.

Execution of this program by the CPU is initiated by the process of applying power to the micro-computer and the power-on clear generated by the I/O PWB.

Execution begins by clearing the entire read/write memory (RAM) and setting the STOP mode.

The control program then goes into a loop where it monitors the position of the control switches and operator push button switches. When one of the operator push button switches changes from OFF to ON a program sub-routine is executed that causes the TCT300 to perform the appropriate operation.

The program routine that monitors the switches also monitors the UART receive and transmit data flags and will execute the appropriate sub-routine to handle these data should they occur. Figure 15 is a memory map showing the various ROM locations and the part of the control program each ROM contains. Notice that the quantity of ROM's depends upon the TCT300's option configuration.

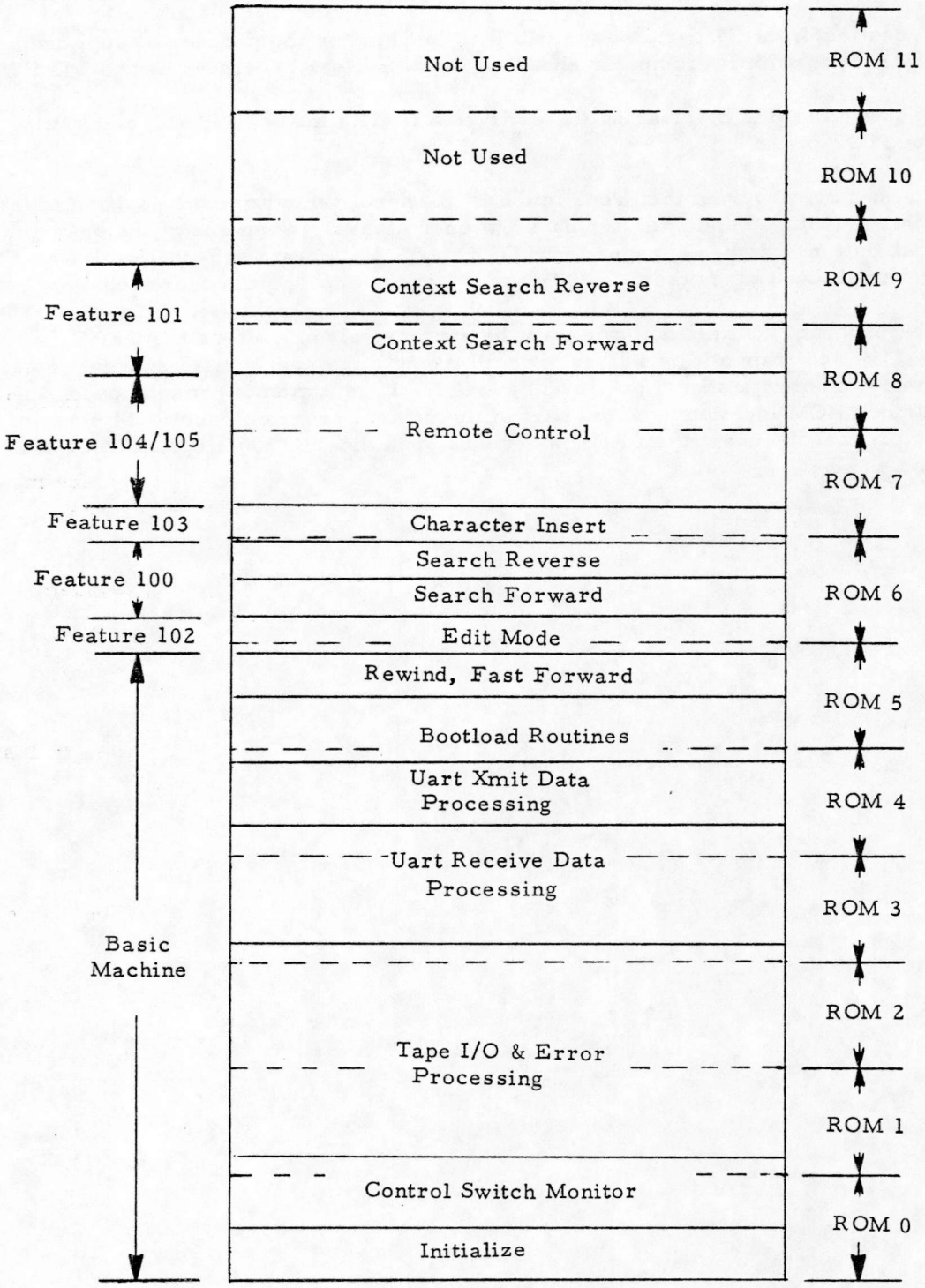

Control Program Memory Map

Figure 15

XV. PWB JUMPER OPTIONS

The CPU, I/O, and R/W PWB's contain jumper connections that allow various configurations. The commonly connected jumpers have been implemented in the PWB etching. These jumpers may be changed by cutting the printed circuit run and installing the new jumper.

A description of each jumper option follows: (refer to figure 16 - 18 for jumper location).

CPU PWB (Figure 16)

Jumper W1 - This jumper should be installed for normal control program execution. Removing W1 will allow execution of factory test programs.

Jumper W2 - Same as W1

I/O PWB (Figure 17)

Jumper W1 - If installed, the TCT300 does not require a "Data Terminal Ready" signal on pin 20 of the terminal connector.

If removed, the terminal connected to the TCT300 terminal interface must supply "Data Terminal Ready" to enable the TCT300 to receive data.

Jumper W2 - If installed, either "Carrier Detect" (pin 8) or "Data Set Ready" (pin 6) will enable the TCT300 to receive data from the modem interface.

If removed, "Data Set Ready" (pin 6) must be supplied by the modem to enable the TCT300 to receive data.

Jumper W3 - If installed the TCT300 is enabled to receive data regardless of the signal on pin 6 or pin 20 of the Modem connector (overrides the function of W2 by supplying "Data Set Ready" internally).

If removed, see W2.

Jumper W4 - If installed the TTY current loop circuitry is disabled and the RS232 interface is enabled.

If removed the TTY current loop is enabled.

(NOTE: If the current loop option is not installed in the TCT300 jumper W4 must be connected for normal operation).

Jumper W6 - If installed disables 8-bit transparency mode.

Jumper W7 - If installed enables 300 MS line feed delay.

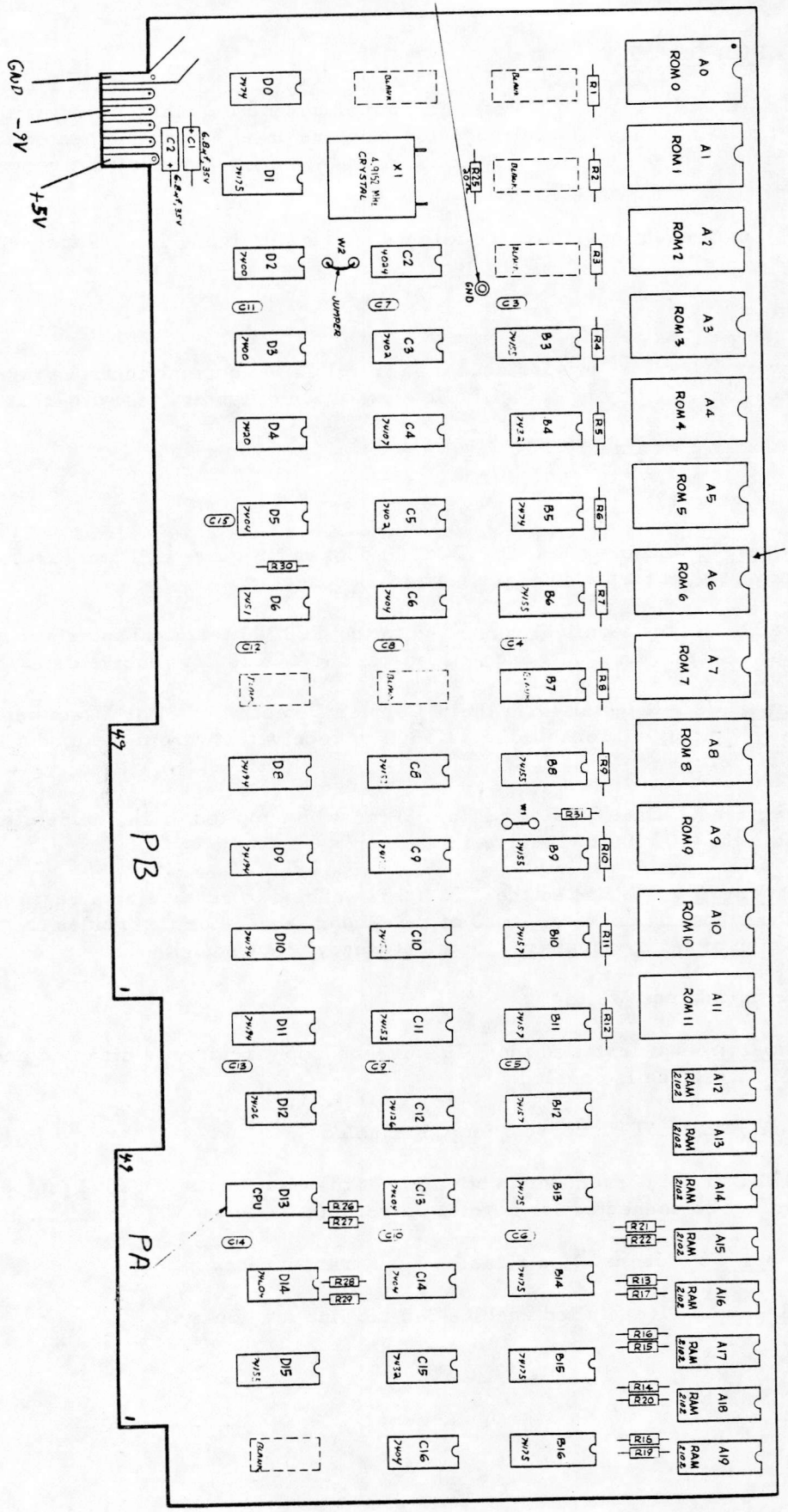

Figure 16
CPU PWB

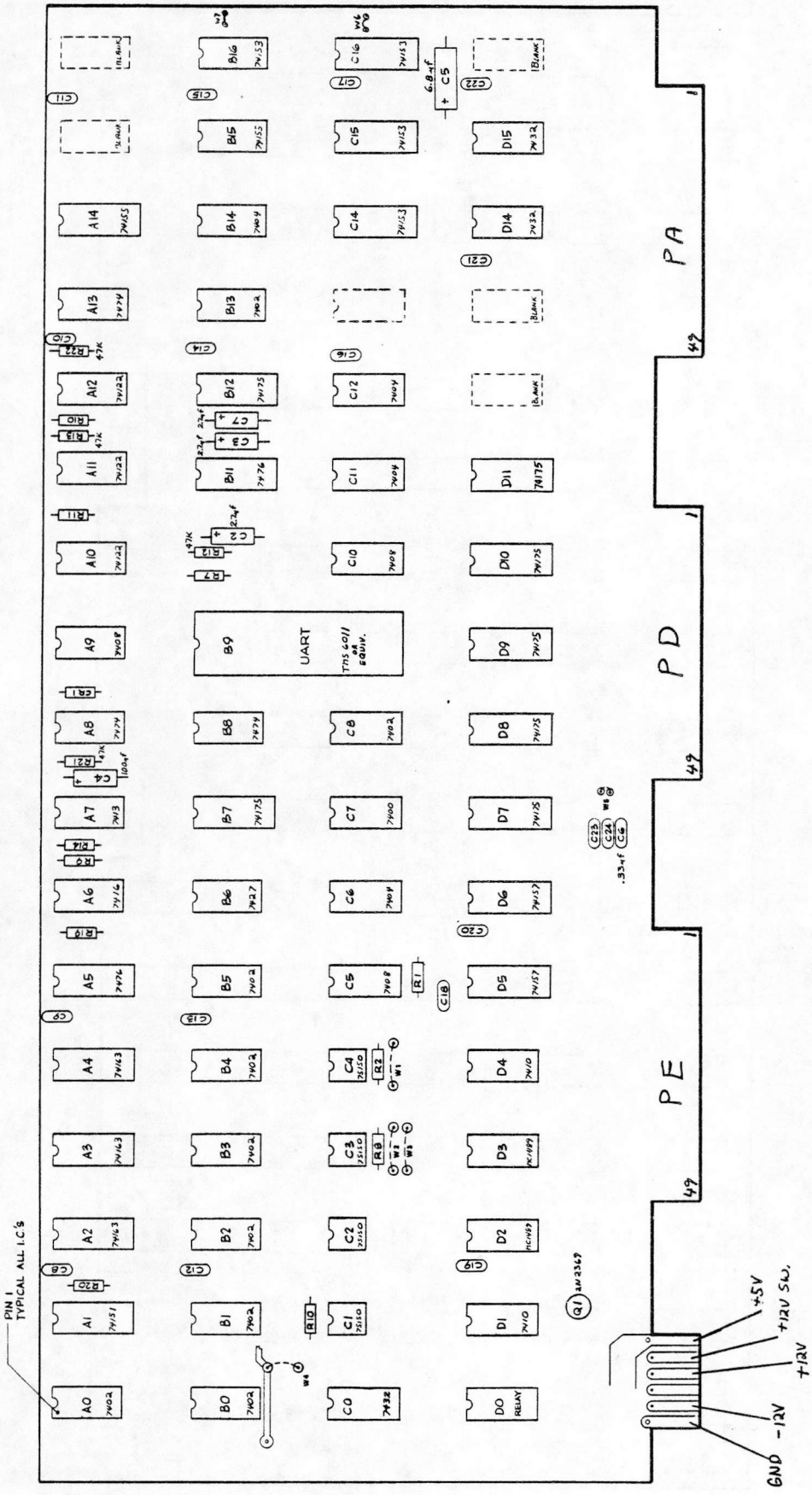

Figure 17
I/O PWB

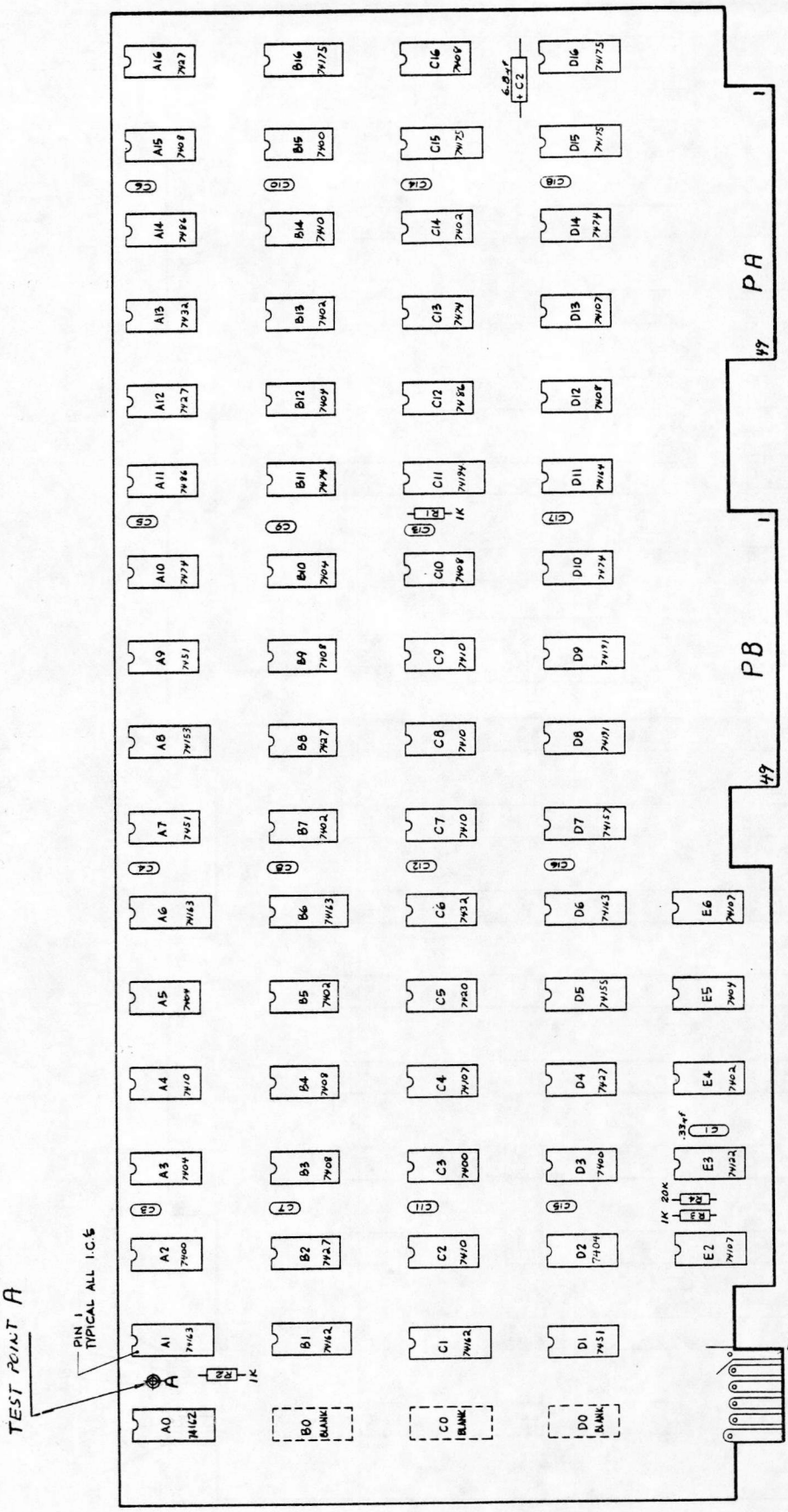

Figure 18
R/W PWB

XVI. MAINTENANCE ADJUSTMENTS

A. Drive Control PWB

There are four potentiometers on the Drive Control PWB. These "Pots" are set at the factory and should not be changed unless the Drive Control PWB or the Drive Motor is replaced.

If adjustment becomes necessary the following procedure is recommended: (refer to Figure 19).

1) R80 Power Amplifier Offset Adjustment

With no cartridge installed, adjust R80 until the Motor Capstan is stationary. If the Drive Motor "creeps" and cannot be balanced, replace Drive Control PWB.

2) R81 I.R. Compensation Adjustment

Insert tape cartridge in drive. Disconnect Read/Write head. Press Xmit mode switch, tape should move forward at approximately 30 IPS.

While momentarily stalling the Drive Motor Capstan, adjust R81 until the voltage at TP-C is zero or slightly positive. A slightly positive value is acceptable, however, TP-C must not be negative when motor is stalled.

This adjustment must be performed quickly as stalling the motor causes armature heating which will affect the accuracy of the adjustment. It is advisable to repeat this adjustment several times allowing the motor to cool for a few minutes in between.

3) R79 FWD Speed Adjustment

Preferred method using TCT300 Test and Standard Tape:

Reconnect Read/Write head. Insert Test and Standard Tape, Load TCT300 speed test. Adjust R79 to obtain stable "Stop" lamp indication, while pressing the fast forward switch (forward speed test).

Alternate method using a strobotach:

Place a mark on the Capstan idler pulley of a tape cartridge. Disconnect Read/Write head, press Xmit mode switch. With the strobotach set to 3400 RPM, adjust R79 until four stable images appear on the marked idler. 3490 RPM is four times the actual speed of 30 IPS (872.5 RPM) but this technique increases the resolution of the measurement by this same factor.

It may be necessary to block the BOT/EOT photocells with opaque tape to prevent the strobe light from causing false EOT/BOT indicators. Take care not to run the tape off the end of the reel while these photocells are covered.

DIGITGRAPH
P. O. Box 4249
Tucson, Arizona 85

4) R78 Reverse Speed Balance

Using the same method as used for Forward Speed Adjustment, adjust R78 for proper reverse speed while running the tape in reverse at 30 IPS. Reconnect Read/Write head.

B. Photocell PWB Alignment

The BOT/EOT detection circuitry is mounted on a single PWB located directly above the tape cartridge BOT/EOT window.

When this PWB is replaced, alignment may be accomplished using any tape cartridge as follows:

Check the BOT/EOT lamp to ensure the filament is aligned in the vertical axis and that the lamp is securely fastened to the mounting block.

Manually turn the cartridge capstan idler until the BOT is directly in front of the mirror. Insert the cartridge in the TCT300 and loosen the four 6-32 screws holding the PWB to the mounting block.

Position the PWB so that the light pattern of the BOT holes fall directly on the two photocells. This pattern may be viewed through the photocells as they are translucent.

When the PWB is properly positioned, tighten the four 6-32 screws and adjustment is completed.

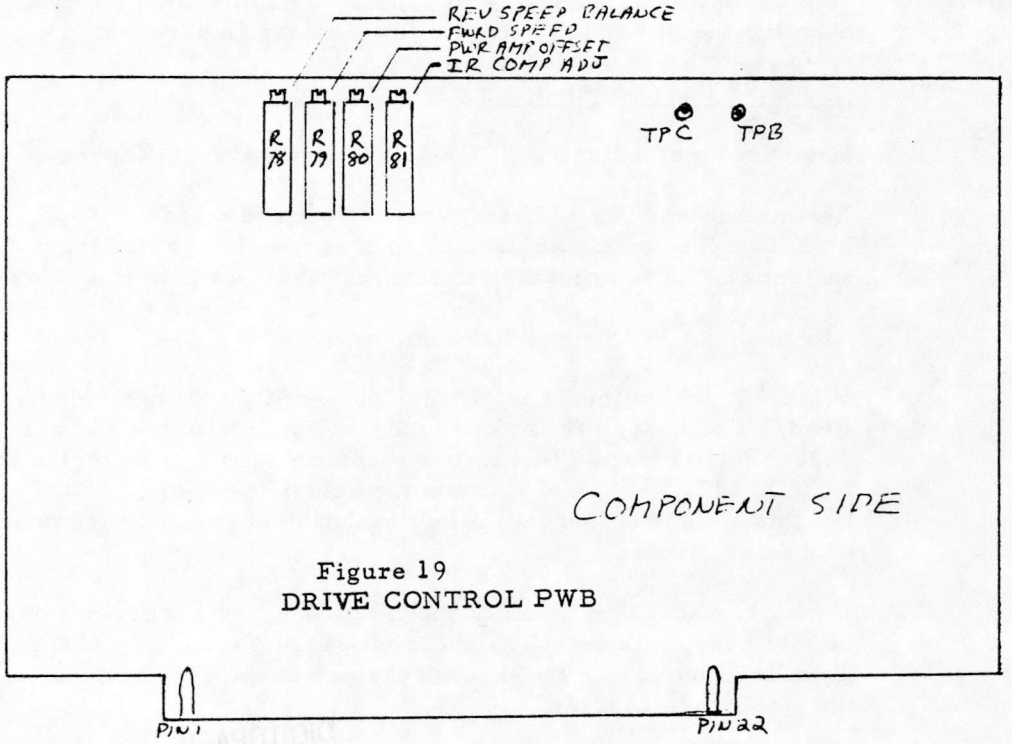

Figure 19
DRIVE CONTROL PWB

XVII. SUBASSEMBLY REPLACEMENT PARTS

The following is a list of replaceable subassemblies and parts. Refer to Figures 19 and 20.

ITEM	STK#	Drawing #	Description
1	4035	DC300A, TC2000	Tape Cartridge
2	3810	TCD300	Tape Drive
3	4258	D01727G1	Input/Output PWB
4	4256	D01735G1	Read/Write PWB
5	4257	D01749G1	CPU PWB
6	3807	D01745G1	Power Supply PWB
7	3799	C01760G1	Switch/Indicator PWB
8	3808	C03291	Selector Panel
9	3802	C03296	Signal Harness
	3803	C03297	Signal Harness
	3804	C03298	Signal Harness
10	3798	D03334G1	Bezel Assembly
11	3805	B03336	DC Harness
12	4063	D03287G1	Rear Cover
13	4059	E03285G1	Chassis
14	4175	B03313	Drive Ring
15	4227	3AG-3ASB	Fuse 3A Slo-Blow
16	4145	3AG-6A	Fuse 6A
17	2486	C01830G1	Photocell PWB
18	3812	C01739G1	Read/Write Preamp PWB
19	3813	C01742G2	Drive Control PWB
20	3813	C01742G1	Drive Control PWB
21		C01756G1	Drive Motherboard
22	4280	C01768G1	Drive Motherboard
23	2387		Fan
24		D01840G1	Motherboard
25	3768	D04289P1	Front Panel
26	3766	D04287P1	Chassis
27	2257		Drawer Slides
28	4135	C03310G2	Transformer
29	4139		Capacitor 67000 ufd
30	4138		Capacitor 38000 ufd

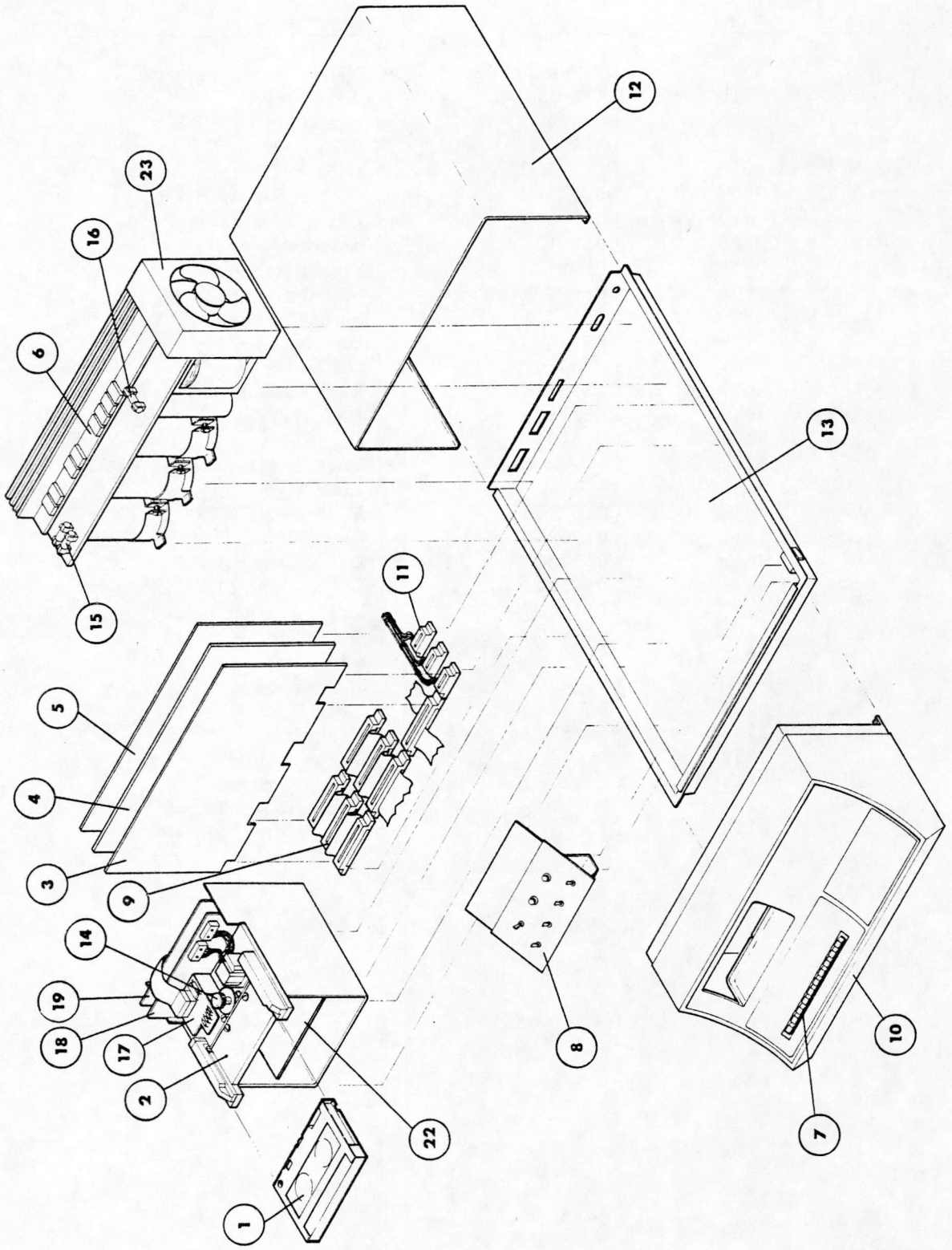

Figure 19 - TCT300

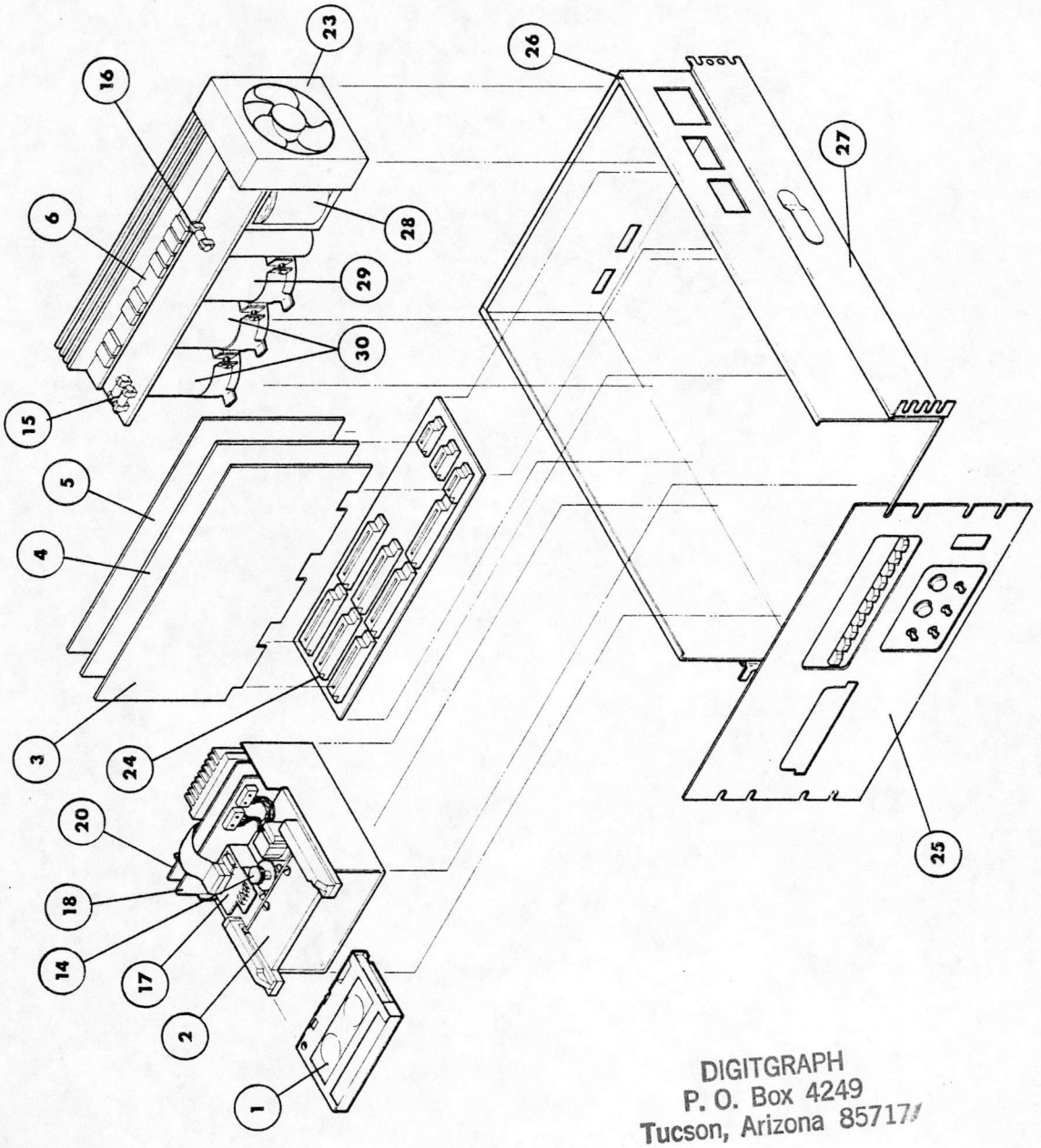

Figure 20 - TCT300R

DIGITGRAPH
P. O. Box 4249
Tucson, Arizona 85717

APPENDIX A

WARRANTY

Three Phoenix Company (Seller) warrants its products delivered hereunder to the original purchaser only, to be free from defects in material and workmanship, when properly used in the nammer and for the purpose for which manufactured. However, components manufactured by others and used in equipment manufactured by the Seller are neither expressly nor impliedly warranted by Seller, and shall carry only the warranty of such other manufacturers. Provided, however, without limiting the generality of the foregoing, any misuse, abuse, accident, negligence, or any repair or alteration other than by persons authorized in writing by Seller to make such repair or alteration shall, upon its occurence, immediately terminate all Seller's warranties. Further provided, Buyer shall notify Seller in writing and shall return, shipping charges prepaid, all products which Buyer believes are not as above warranted within ninety (90) days after such defect is, or with reasonable diligence should have been, discovered by Buyer. Failure to so notify Seller and to return such products shall fully and completely release Seller from its otherwise existing warranty obligations hereunder.

Seller may render friendly assistance to Buyer, should Buyer seek to modify or refine the product delivered hereunder. Such friendly assistance shall not be construed as an admission, or evidence tending to establish that Seller has breached its warranties as set out herein, or had assumed any contractual obligations to assist in such modification or refinement.

SELLER MAKES NO REPRESENTATIONS, WARRANTIES, OR GUARANTEE OF ANY KIND, INCLUDING BUT NOT LIMITED TO MERCHANTABILITY AND FITNESS FOR PURPOSE, EXPRESSED, IMPLIED, OR OTHERWISE ARISING BY OPERATION OF LAW, TRADE USAGE, OR COURSE OF DEALING EXCEPT AS SET FORTH HEREINABOVE, AND BY ANY PERSON, WHETHER OR NOT A REPRESENTATIVE OF SELLER, SHALL NOT BE BINDING UPON SELLER, UNLESS AND UNTIL ACCEPTED BY SELLER IN WRITING, AT ITS HOME OFFICES IN PHOENIX, ARIZONA, BY A PROPERLY AUTHORIZED OFFICER OF SELLER.

Seller's obligation in any and all events is expressly limited to the repair or replacement of the defective product without charge to Buyer, F.O.B. Seller's shipping point, or the repayment to Buyer of the price of such product that is not as warranted herein. Seller shall have the sole right to elect from the performance, nonperformance, or breach by Seller of the Contract of which these terms and conditions are a part, except as expressly set out hereinabove.

APPENDIX C

TCT300 SCHEMATIC DIAGRAMS

THREE PHOENIX COMPANY

C1

REVISION
A ISSUED 2-27-76

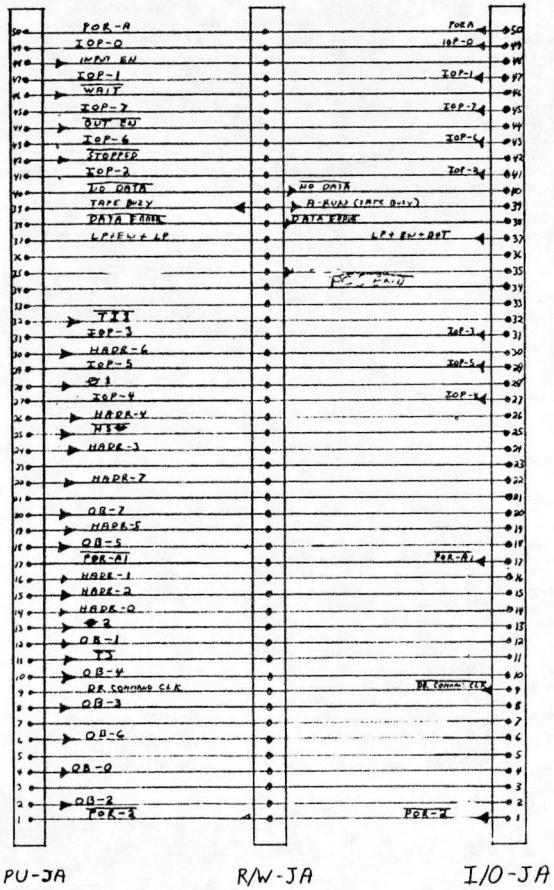

THREE PHOENIX COMPANY		
INTERCONNECTION DIAGRAM CPU, R/W & I/O INTERCONNECT TCT-300 CABLE ASSY	SHEET 1 OF 1	C03613

TCT-300

TCT-300

REVISION
A
ISSUED 2-27-76 AJ

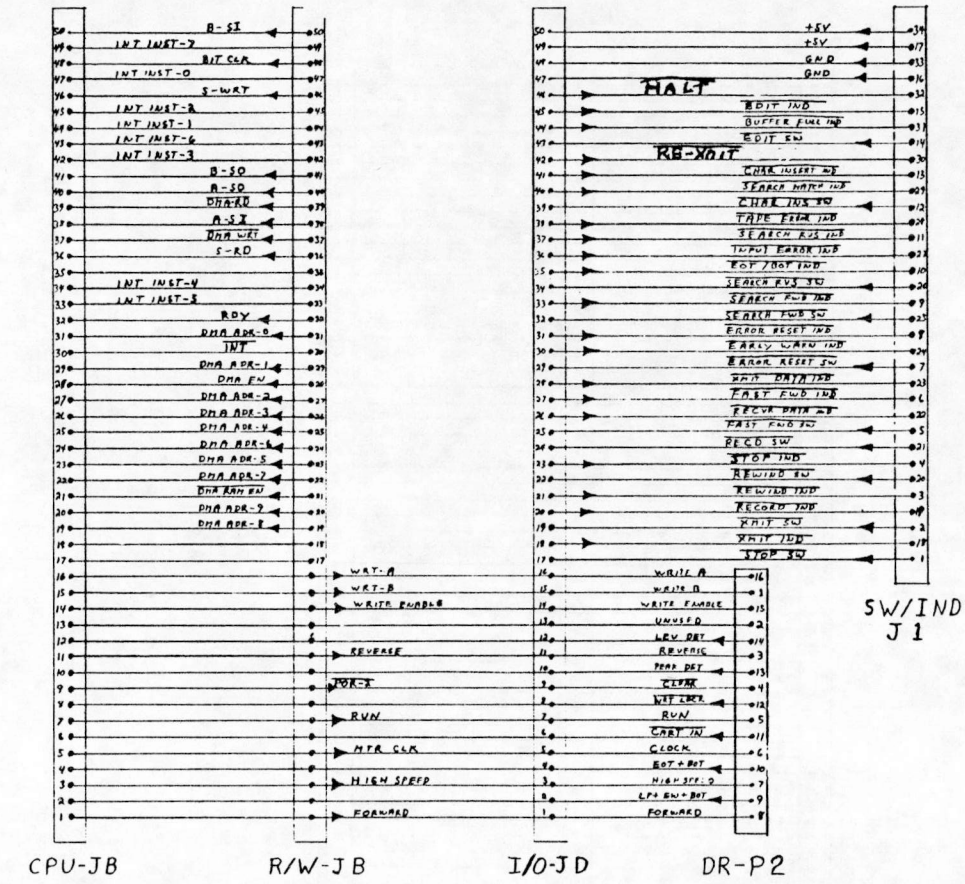

C2

THREE PHOENIX COMPANY

THREE PHOENIX COMPANY		
INTERCONNECTION DIAGRAM SW/IND PANEL CABLE ASSY TCT-300	SHEET 1 OF 1	C03611

REVISION
A ISSUED 2-27-76 AB

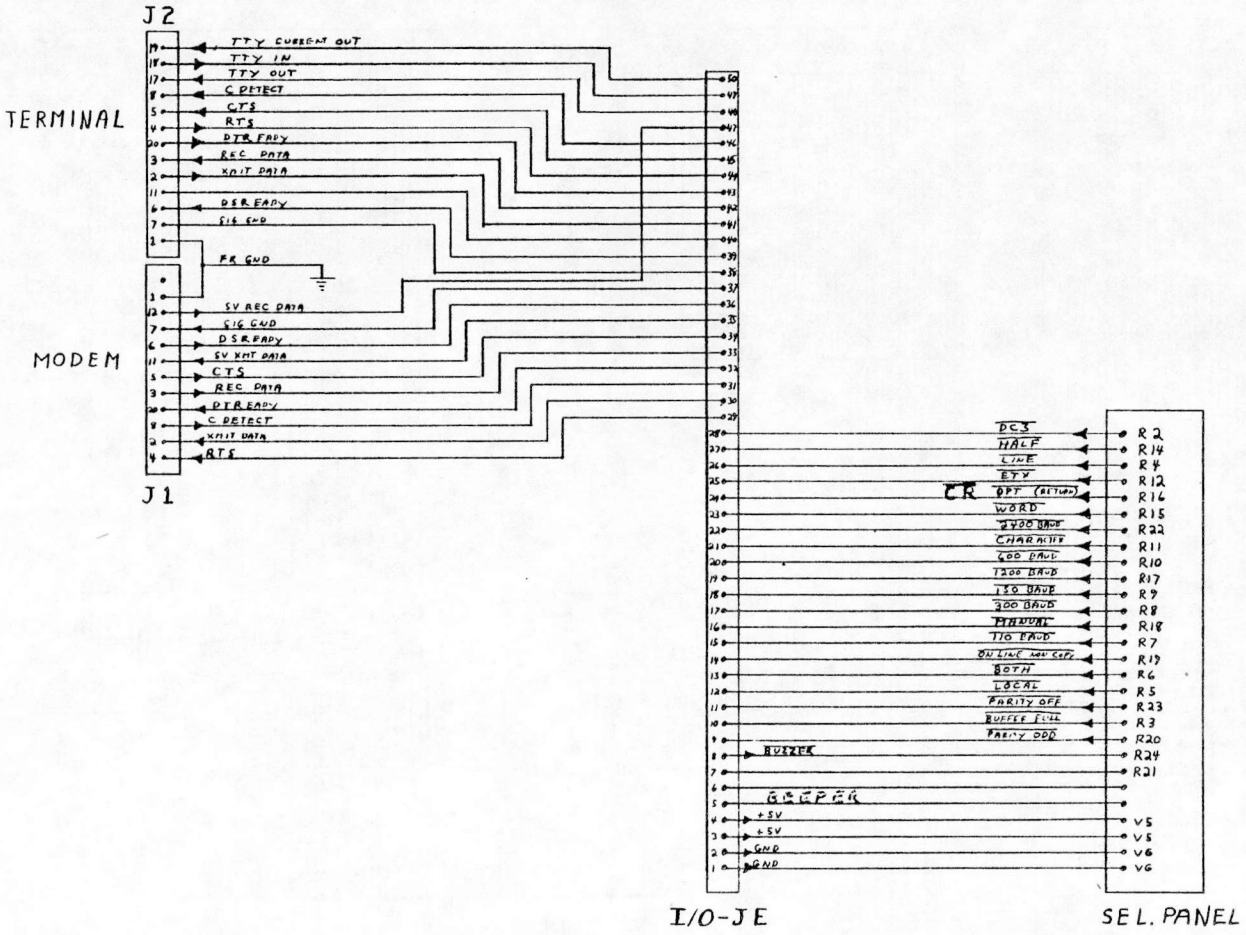

THREE PHOENIX COMPANY		
INTERCONNECTION DIAGRAM SELECTOR PANEL CABLE ASSY TCT-300	SHEET 1 OF 1	C03612

TCT-300

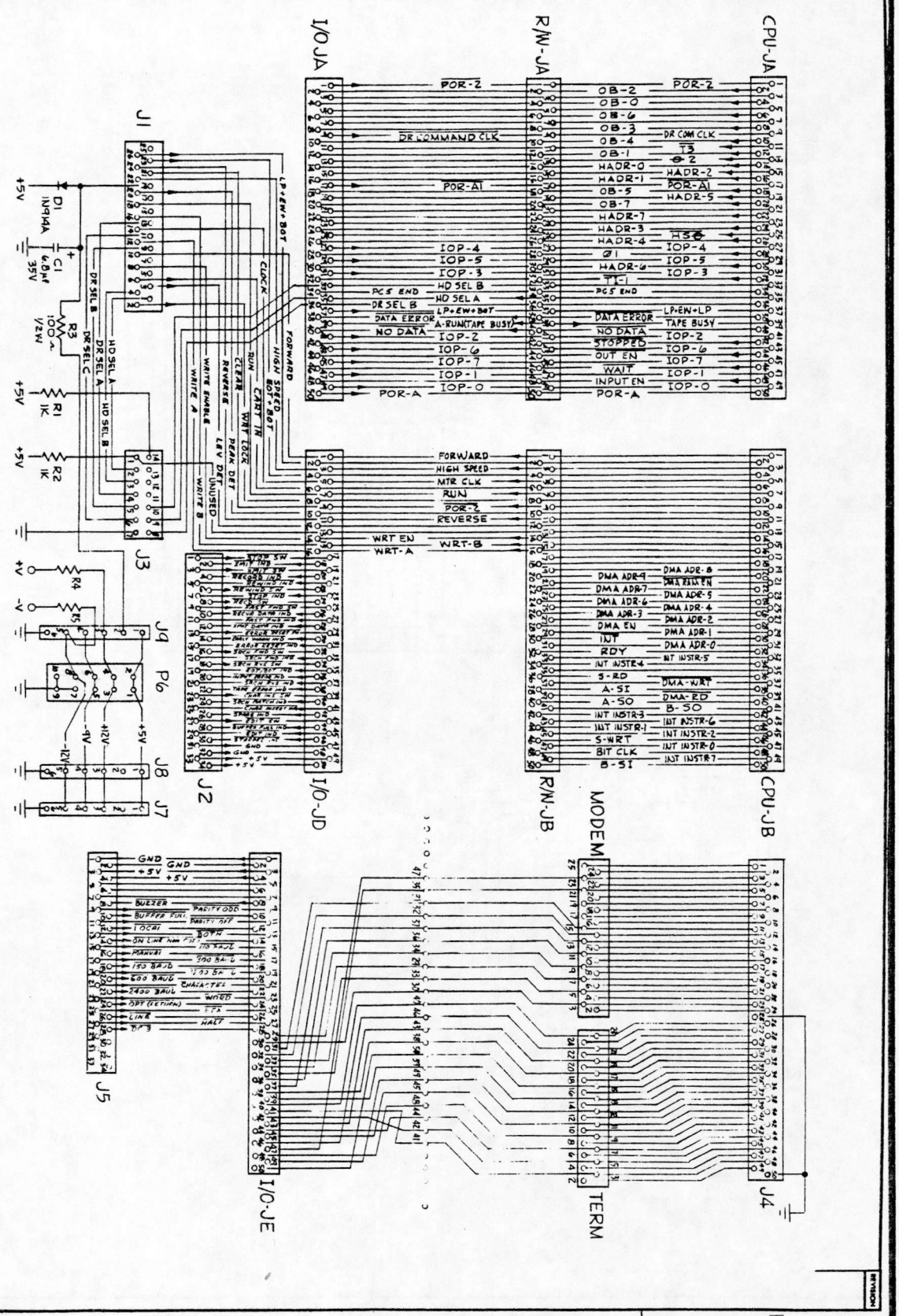

THREE PHOENIX COMPANY		
INTERCONNECTION DIAGRAM MOTHER BOARD TCT-300R & TCT-300RD	SHEET 1 OF 1	C01916

THREE PHOENIX COMPANY

THIS DOCUMENT CONTAINS INFORMATION WHICH IS PROPRIETARY [redacted] AND IS TO BE CONSIDERED CONFIDENTIAL BY ALL PARTIES TO WHOM FURNISHED.

REVISION	DESCRIPTION	DATE	APPROVED
A	ISSUED	10/31/74	JCD

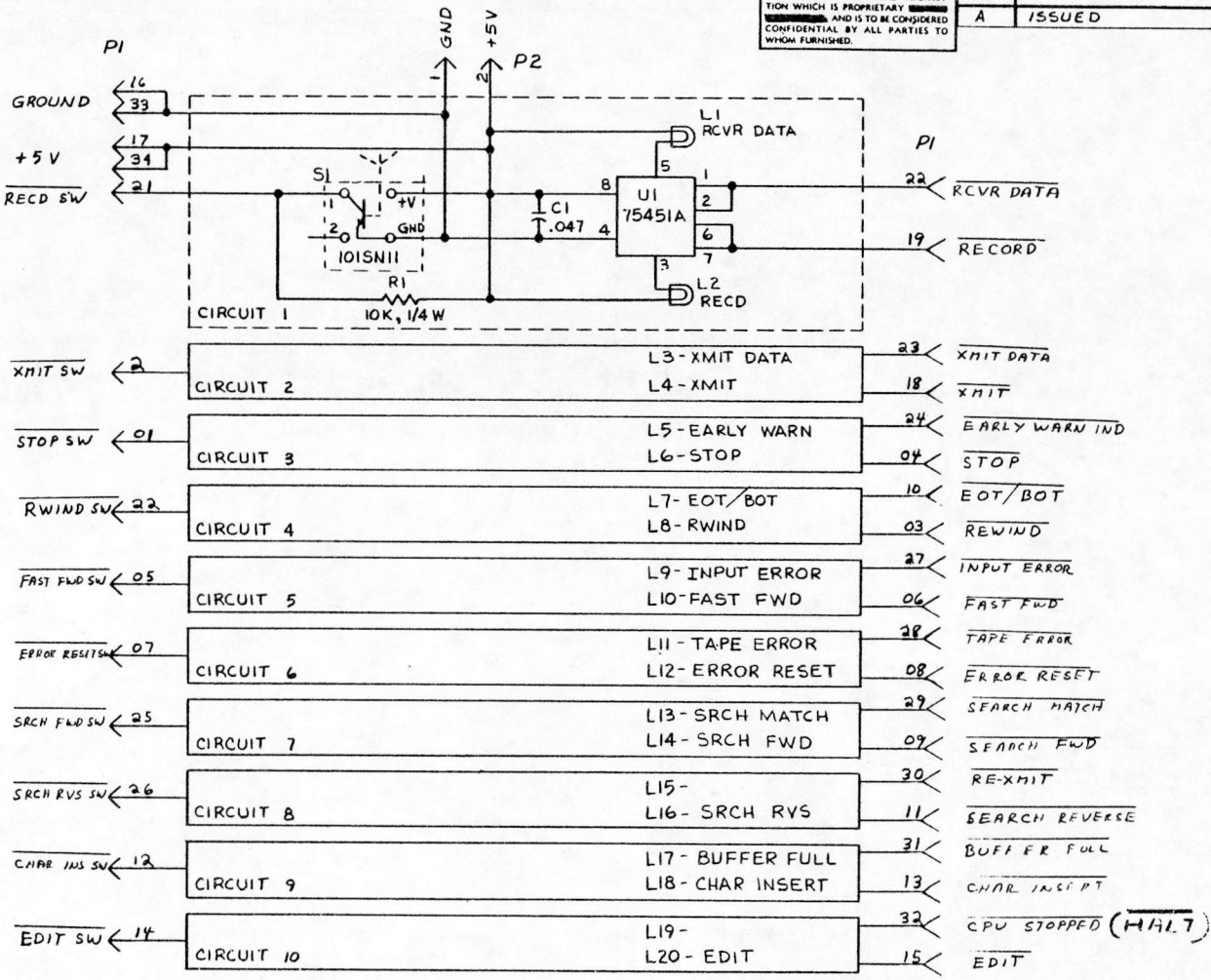

THREE PHOENIX COMPANY

UNLESS OTHERWISE SPECIFIED TOLERANCES ON 2-PLACE DECIMALS ± 3-PLACE DECIMALS ± ANGLES ± FRACTIONS ± SURFACE FINISH √	MATERIAL	DRAWN BY T. KELLER	DATE 6/10/74	PWB SCHEMATIC
	HEAT TREAT	APPROVED J. D.	10/31/74	SW/IND BOARD TCT-300
	FINISH	APPROVED	C	SCALE / SHEET 1 OF 1 / C01762

TCT-300

THIS DOCUMENT CONTAINS INFORMATION WHICH IS PROPRIETARY TO [redacted], AND IS TO BE CONSIDERED CONFIDENTIAL BY ALL PARTIES TO WHOM FURNISHED.

REVISION	DESCRIPTION	DATE	APPROVED
A	ISSUED	8/[illegible]/76	[illegible]
B	[illegible] ENLARGED VIEW & NOTE [illegible]	[illegible]	[illegible]

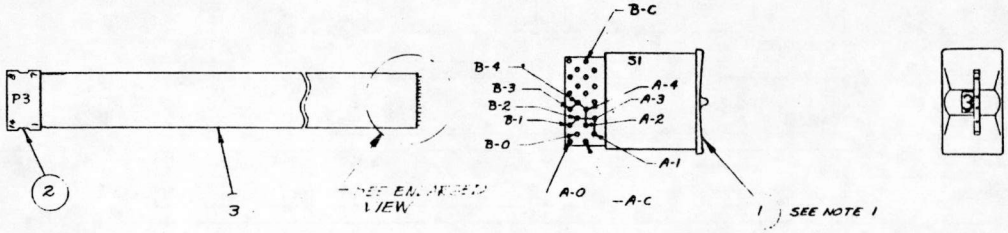

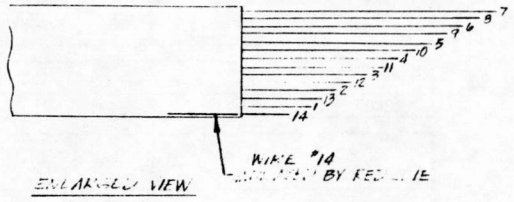

WIRE LIST		
FROM	TO	NAME
P3-2	S1A-C	HD SEL A
P3-3	S1B-C	HD SEL B
P3-7	S1B-1	GND
S1B-1	S1B-2	↓
S1B-2	S1A-3	↓
S1A-3	S1A-1	GND
P3-9	S1A-0	I/O HD SEL A
P3-10	S1B-0	I/O HD SEL B
P3-14	S1B-3	PULLUP
S1B-3	S1B-4	↓
S1B-4	S1A-4	↓
S1A-4	S1A-2	PULLUP

NOTES:
1. PLUG HOLES A & F INSIDE SWITCH WHILE IN POSITION 2.
USE EYELET #974 FOR PLUGS, MELT HOUSING WITH SOLDERING IRON OVER A & F.

SEE SEPARATE PARTS LIST

THREE PHOENIX COMPANY

UNLESS OTHERWISE SPECIFIED TOLERANCES ON 2-PLACE DECIMALS ± 3-PLACE DECIMALS ± ANGLES ± FRACTIONS ± SURFACE FINISH √	MATERIAL	DRAWN BY D. STRAUB	DATE 8/31/76	SWITCH ASSY
	HEAT TREAT	APPROVED		
	FINISH	APPROVED		TCT-300R 4 TRACK
			C	SCALE 1/1 SHEET 1 OF 1 C03625

THREE PHOENIX COMPANY

C6

THREE PHOENIX COMPANY

C7

REV	DESCRIPTION	DATE	APPD
C	REVISED & RE DRAWN	1-24-75	
D	DELETED C22 & ADDED C29 SNOTE 5	7-7-75	
E	ADDED C24	11-[illegible]-75	
F	EO-00462	[illegible]	
F1	REC CHG DELETE R32 33 & 34 FROM [illegible]	[illegible]	
G	EO-00447	[illegible]	

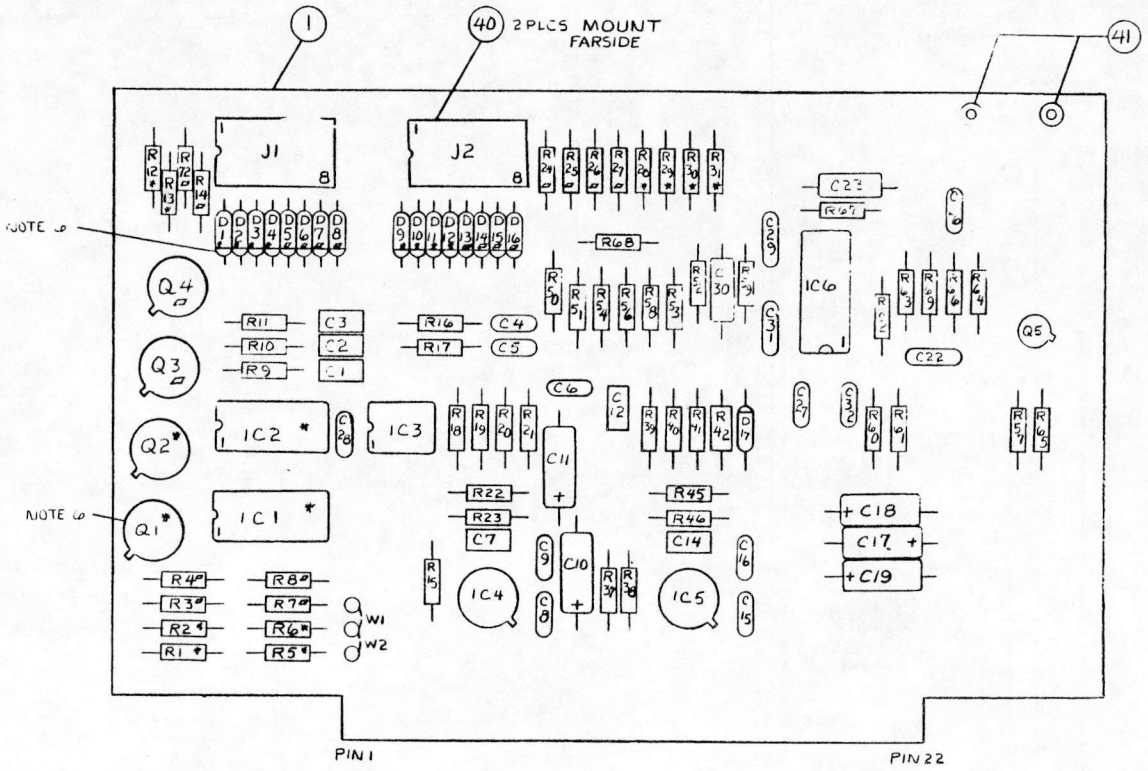

COMP NO.	R RESISTOR	IC	Q TRANSISTORS	D DIODE	C CAPACITORS	R RESISTORS	COMP NO.
75							
74						10.0K	24
73					.0022µf	2.0K	23
72	10Ω				10pf	1.0K	22
71						1.0K	21
70						10.0K	20
69	2K				6.8µf, 35V	150Ω	19
68	1.5K				6.8µf, 35V	1.0K	18
67	300Ω			1N5234B	6.8µf, 35V	10.0K	17
66	6.2K			1N4148	.047µf, 25V	10.0K	16
65	1.0K				.047µf, 25V	1.5K	15
64	100Ω				470pf	10.0K	14
63	3.0K					10.0K	13
62	3.0K				1000pf	10.0K	12
61	1.0K				6.8µf, 35V	619Ω 1%	11
60	5.1K				6.8µf, 35V	619Ω 1%	10
59	300Ω				.047µf, 25V	5.1K	9
58	1.5K				.047µf, 25V	3.3K	8
57	100Ω				470pf		7
56	20.0K 1%	µA749-DC			.047µf, 25V		6
55		µA710-C	2N2369A		NOTE #5	3.3K	5
54	10.0K 1%	µA710-C	2N2904A		NOTE #5	620Ω	4
53	20.0K 1%	SN75452			1000 pf		3
52	10.0K 1%	SN7404N			1000 pf		2
51	2.0K 1%	SN7426N	2N2904A	1N4148	270pf	620Ω	1
COMP NO.	RESISTOR	INTEG CKT	TRANSISTORS	DIODE	CAPACITORS	RESISTORS	COMP NO.

6. D1,2,9,10 & 31 E-C REVERSED BY JUMPERS FOR G1.
5. C4 & C5 TO BE .33µf, 25V FOR G1
   C4 & C5 TO BE .047µf, 25V FOR G2 & G3
4. □ COMPONENTS FOR G3 ONLY
3. * COMPONENTS FOR G2 & G3 ONLY
2. ALL RESISTORS ARE 1/4 WATT ±5%.
1. COMPONENT MOUNTING PER INSTITUTE OF PRINTED CIRCUITS, IPC CM-770.

NOTES: UNLESS OTHERWISE SPECIFIED

SEE SEPARATE PARTS LIST

F.C.F. C03320

THREE PHOENIX COMPANY

DRN R L FRAHM	DATE 1-24-75	PWB ASM. DRAWING	
CHK JOHN C DAHL	1-24-75	READ/WRITE	
APPD		TCD-300	
ENG		SCALE 2/1	SHEET 1 CONT'D - C C01739

TCT-300

TCT-300

REVISION	DESCRIPTION	DATE	APPROVED
B	CHANGE J1 PIN NUMBERS	10/31/74	JCD
C	DOCUMENTATION CORRECTIONS	1/16/75	JCD
D	REVISED FOR G1	7/17/75	JCD
E	SEE SHEET 3	11-13-75	JCD
F	EO-00428	2-3-76	(7)

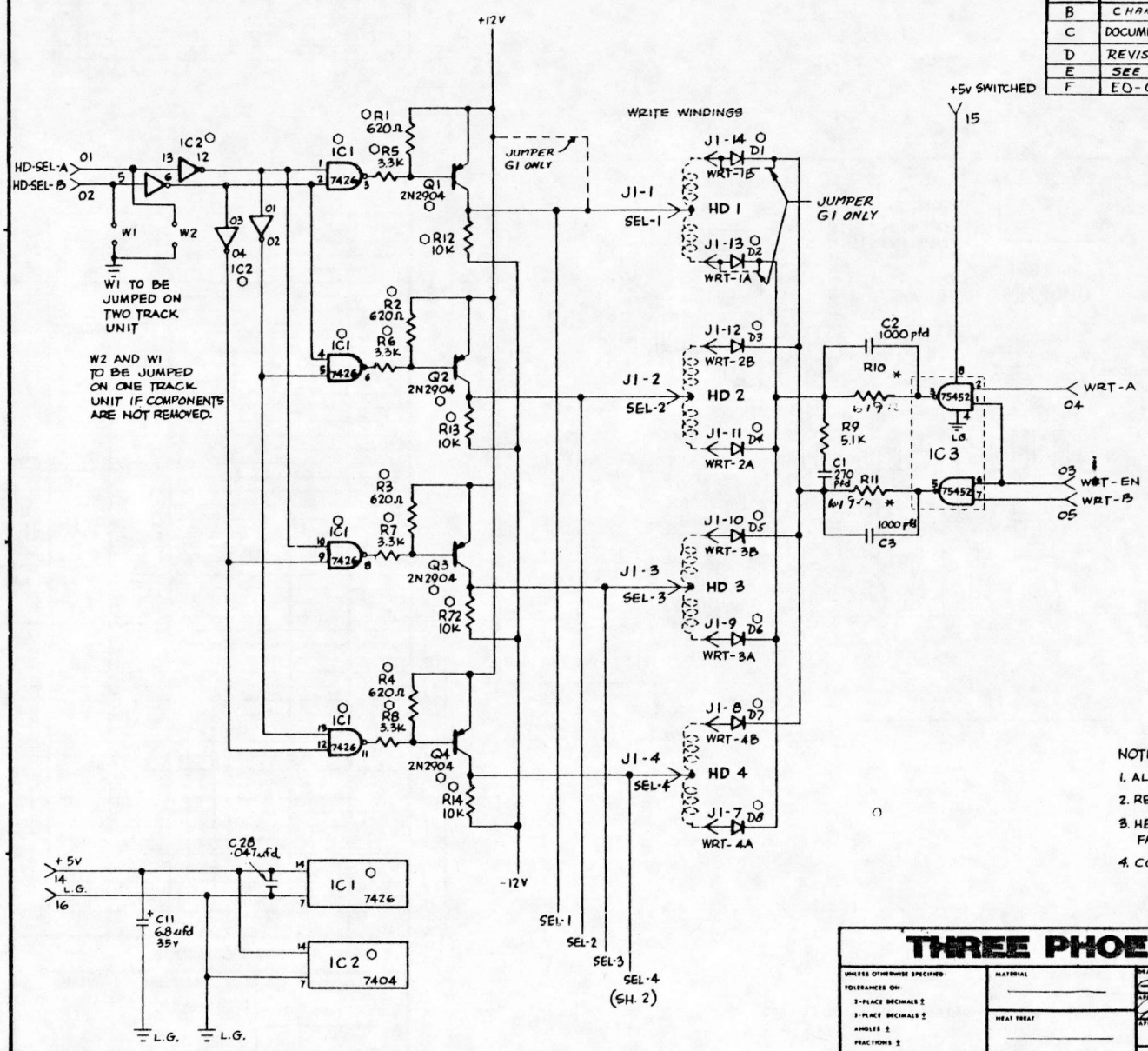

NOTES: (UNLESS OTHERWISE SPECIFIED)

1. ALL RESISTORS ARE 1/4 WATT, ±5%
2. RESISTORS WITH * ARE ±1%
3. HEAD SELECT DIODES ARE IN4148 OR FAIRCHILD D.I.P. FSA2719M
4. COMPONENTS WITH O, NOT USED IN G1

TCD-300

THREE PHOENIX COMPANY

UNLESS OTHERWISE SPECIFIED: TOLERANCES ON: 2-PLACE DECIMALS ± 3-PLACE DECIMALS ± ANGLES ± FRACTIONS ± SURFACE FINISH √	MATERIAL	DRAWN BY G.H. WOSSIE	DATE 12-13-73	READ/WRITE CONTROL TCD 300
	HEAT TREAT	APPROVED	12/20/73	
	FINISH		C	SCALE / SHEET 1 OF 3 / C01740

THREE PHOENIX COMPANY

REVISION	DESCRIPTION	DATE	APPROVED
B	CHANGE J2 PIN NUMBERS	10/31/74	JCD
C	DOCUMENTATION CORRECTIONS	1/16/75	JCD
D	REVISED FOR G1	7/17/75	JCD

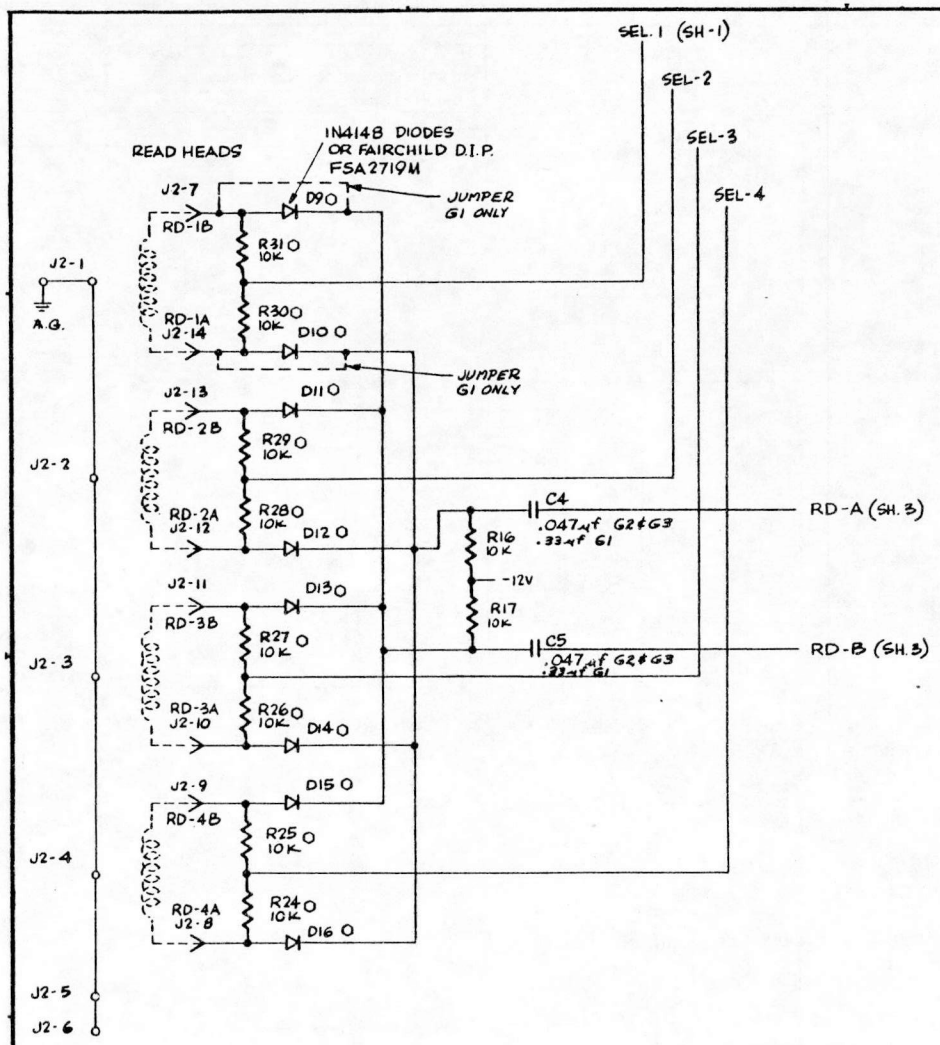

TCD 300

THREE PHOENIX COMPANY

UNLESS OTHERWISE SPECIFIED: TOLERANCES ON: 2-PLACE DECIMALS ± 3-PLACE DECIMALS ± ANGLES ± FRACTIONS ± SURFACE FINISH √	MATERIAL	DRAWN BY G.H. DEBBIE	DATE 12-13-73	READ/WRITE CONTROL
	HEAT TREAT	APPROVED G.A.	12/24/73	
	FINISH	APPROVED		
			C	SCALE / SHEET 2 OF 3 / CO 1740

TCT-300

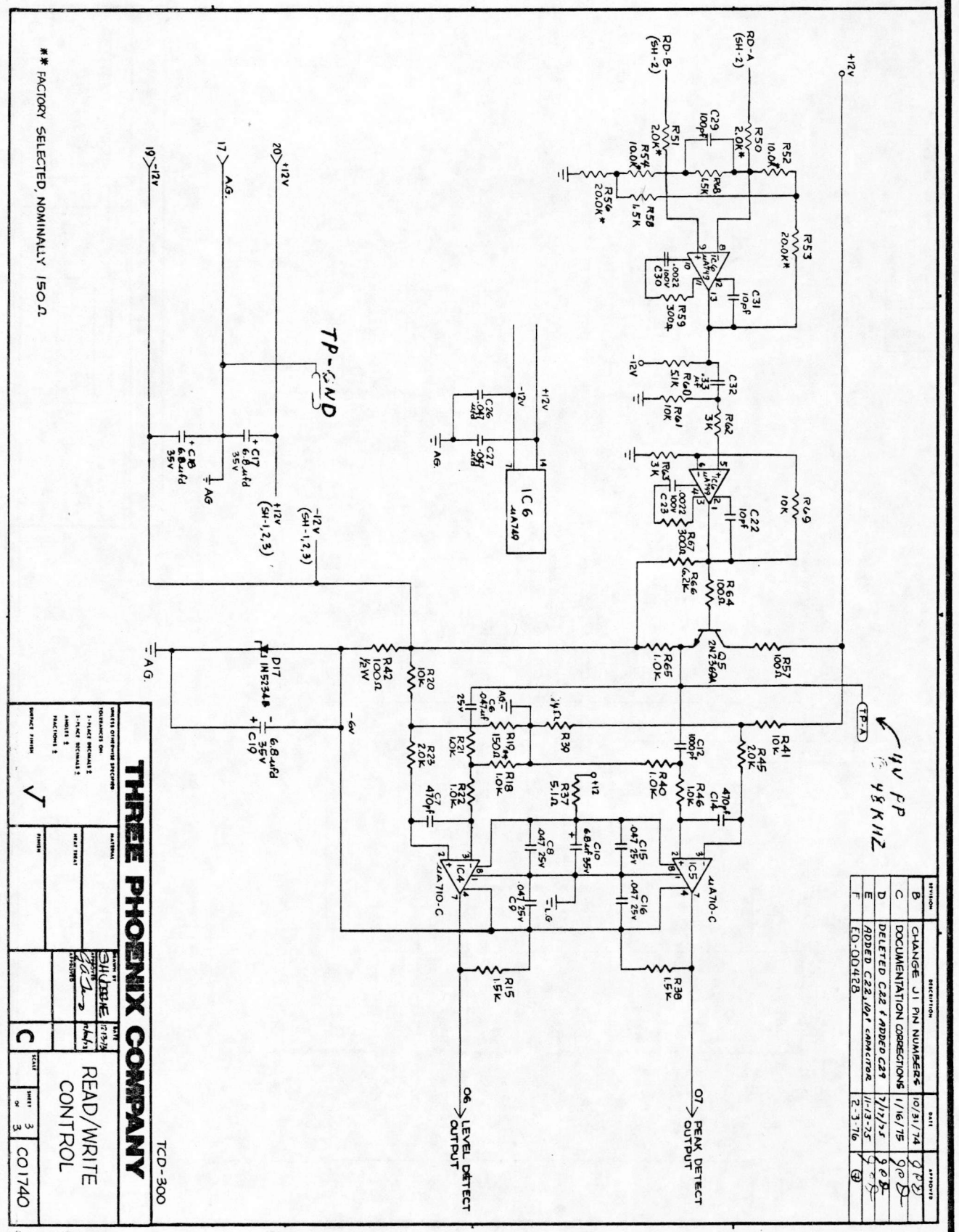

REVISION	DESCRIPTION	DATE	APPROVED
B	CHANGE J1 PIN NUMBERS	10/31/74	
C	DOCUMENTATION CORRECTIONS	11/16/75	
D	DELETED C22 + ADDED C29	7/17/75	
E	ADDED C22, 10pf CAPACITOR	11-13-75	
F	EO-00428	2-3-76	

** FACTORY SELECTED, NOMINALLY 150Ω

UNLESS OTHERWISE SPECIFIED
TOLERANCES ON
2-PLACE DECIMALS ±
3-PLACE DECIMALS ±
ANGLES ±
FRACTIONS ±
SURFACE FINISH

MATERIAL
HEAT TREAT
FINISH

DRAWN BY: SHIBBLE 12/15/75
ENGR: 1/6/76
STRESS:

THREE PHOENIX COMPANY

READ/WRITE CONTROL

SIZE: C
SHEET 3 OF 3
TCD-300
C01740

THREE PHOENIX COMPANY

C11

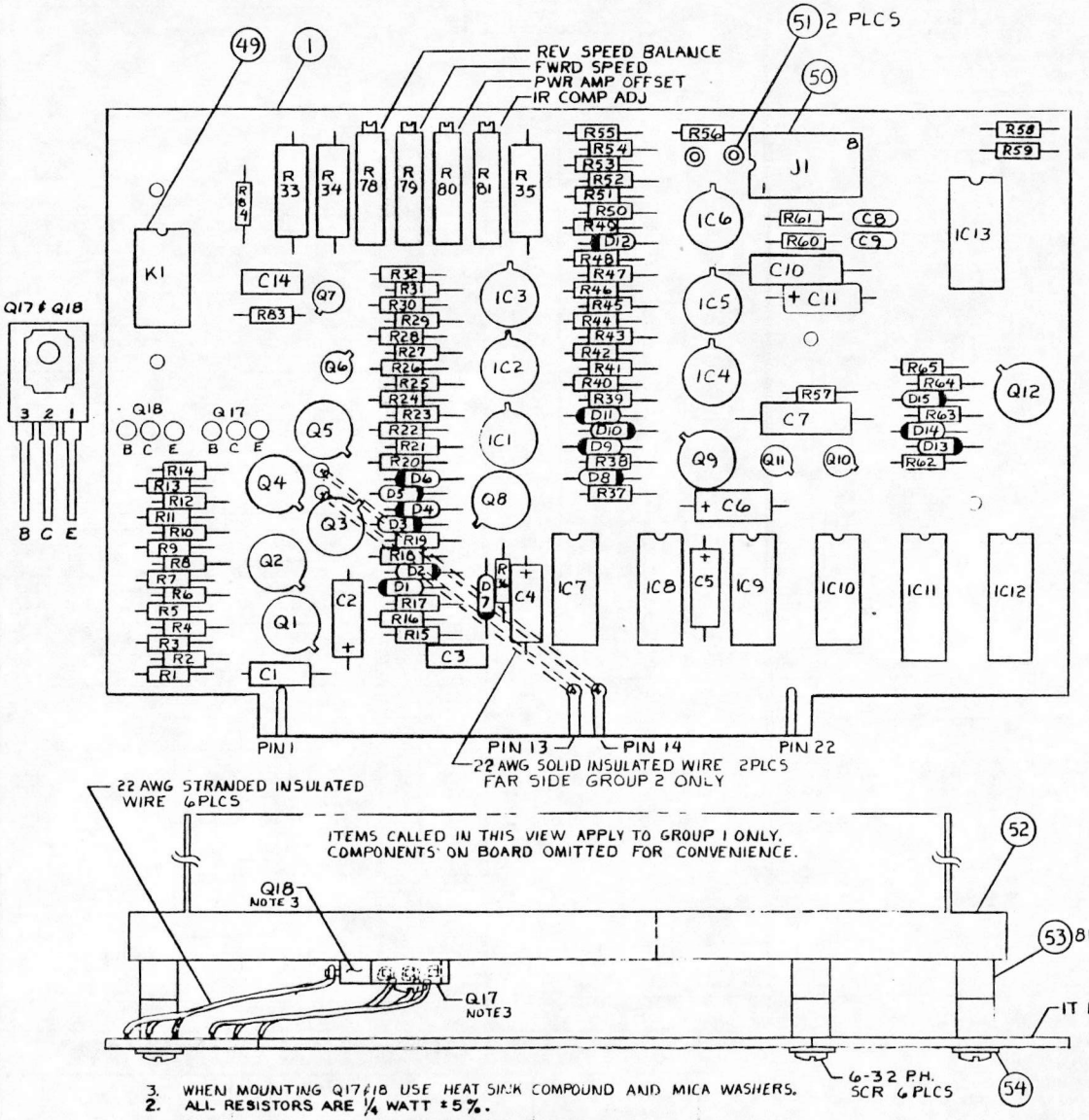

REV	DESCRIPTION	DATE	APPD
C	RE[illegible] & RE[illegible]	1-20-75	
D	ADDED R58 & R59 & DETAIL Q17 & Q18	7-17-75	
E	EO-00426	12-11-75	
F	EO-00452, ADDED SHT 2	11-15-76	

COMP NO.	R RESISTORS	IC	Q TRANSISTORS	D DIODE	C CAPACITORS	R RESISTORS	COMP NO.
100						1.0K 1%	50
						2.0K 1%	49
						1.0K 1%	48
						1.3K	47
						2.0K	46
						10.0K 1%	45
						2.0K	44
						10.0K 1%	43
							42
							41
90						10.0K 1%	40
						2.21K 1%	39
						1.0K	38
						330Ω	37
						510Ω	36
85						.5Ω 2W	35
84	510Ω					.5Ω 2W	34
83	430Ω					.5Ω 2W	33
82						30.0K	32
81	20K VAR					3.3K	31
80	10.0K VAR					20.0K 1%	30
79	2.0K VAR					3.0K	29
78	500Ω VAR					2.0K	28
77						10.0K 1%	27
76						5.1K	26
75						10.0K	25
74						2.0K	24
73						20.0K 1%	23
72						5.1K	22
71						6.2K	21
70						6.2K	20
69						1.0K	19
68			MJE-1101			1.0K	18
67			MJE-1091			330Ω	17
66						330Ω	16
65	1.0K			IN914A		10.0K	15
64	330Ω				.33μf,25V	470Ω	14
63	1.0K	SN7404N				100Ω	13
62	6.2K	SN74193N	2N2904A			470Ω	12
61	1.0K	SN74193N	2N4391		6.8μf,35V	4.7Ω	11
60	1.0K	SN7430N	2N4391		.1μf,100V	10Ω	10
59	1.0K	SN7427N	2N2904A		.33μf,25V	10.0K	9
58	1.0K	SN7410N	2N2904A		.33μf,25V	10.0K	8
57	6.2K	DAC-01-HS	2N4391		.047μf,100V	100Ω	7
56	20.0K 1%	μA741-C	2N4391		6.8μf,35V	4.7Ω	6
55	10.0K 1%		2N2904A		6.8μf,35V	10Ω	5
54	2.0K		2N2219A		6.8μf,35V	10.0K	4
53	10.0K 1%		2N2219A		100pf	51Ω	3
52	10.0K 1%		2N2905A		6.8μf,35V	2.0K	2
51	20.0K 1%	μA741-C	2N2905A	IN914A	.01μf,100V	2.0K	1

3. WHEN MOUNTING Q17&18 USE HEAT SINK COMPOUND AND MICA WASHERS.
2. ALL RESISTORS ARE ¼ WATT ±5%.
1. COMPONENT MOUNTING PER INSTITUTE OF PRINTED CIRCUITS, IPC CM-770.

NOTES: UNLESS OTHERWISE SPECIFIED

SEE SEPARATE PARTS LIST

F.C.F. C03320

G1
G2

THREE PHOENIX COMPANY

DRN R L FRAHM	DATE 1-20-75	PWB ASM. DRAWING
CHK J C DAHL	1-20-75	DRIVE CONTROL
APP'D		TCD-300
ENG		SHEET 1 CONT ON 2 C C07-2

TCT-300

TCT-300

THIS DOCUMENT CONTAINS INFORMATION WHICH IS PROPRIETARY [redacted], AND IS TO BE CONSIDERED CONFIDENTIAL BY ALL PARTIES TO WHOM FURNISHED.

REVISION	DESCRIPTION	DATE	APPROVED
F	EO-00452	11/15/76	gpb

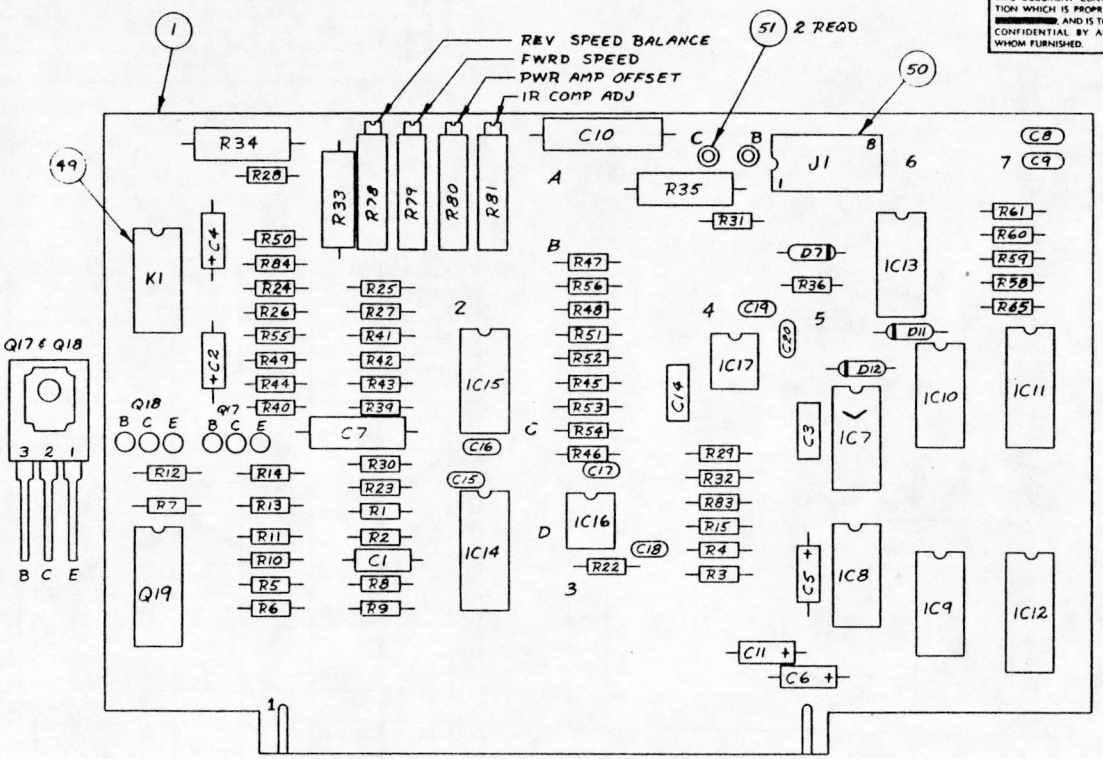

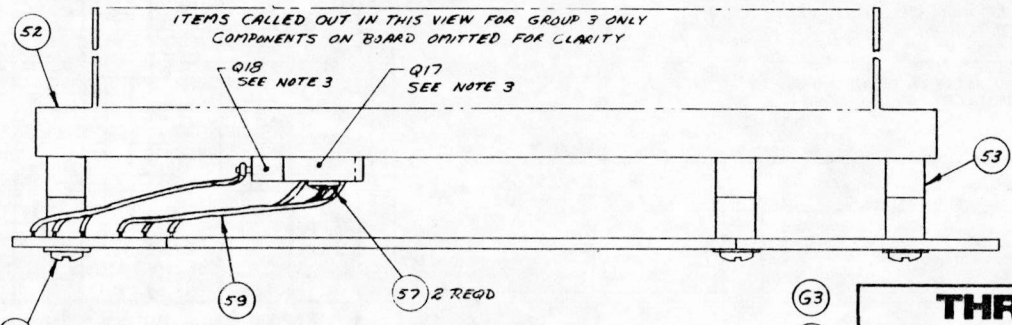

RESISTORS R	COMP NO.	INT. CIRCUITS IC	TRANSISTORS Q	DIODES D	CAPACITORS C	RESISTORS R	COMP NO.
						1.0k, ±1%	50
						2.0K, ±1%	49
						1.0k, ±1%	48
						1.3k	47
						2.0K	46
						10K, ±1%	45
						2.0k	44
						10k, ±1%	43
						10K ±1%	42
						10K, ±1%	41
						10K, ±1%	40
						2.21K, ±1%	39
						—	38
						—	37
						510Ω	36
510Ω	84					.5Ω, 2W	35
430Ω	83					.5Ω, 2W	34
—	82					30K	33
2K POT	81					3.3K	32
10K POT	80					20K, ±1%	31
2K POT	79					3.0K	30
500Ω POT	78					2.0K	29
—	77					10K, ±1%	28
—	76					5.1K	27
—	75					10k, ±1%	26
—	74					2.0K	25
—	73					20K, ±1%	24
—	72					5.1K	23
—	71					—	22
—	70				.047µf, 50V	—	21
—	69		MPQ-6001			—	20
—	68		MJE-1101			—	19
—	67	LM741CN	MJE-1091			—	18
—	66	LM741CN	—			—	17
1K	65	LM348CN	—		.047µf, 50V	10K	16
—	64	LF13202N	—		.047µf, 25V	470Ω	15
—	63	SN7404N	—		—	100Ω	14
—	62	SN74193N	—	IN914A	—	470Ω	13
1K	61	SN74193N	—	IN914A	6.8µf, 35V	4.7Ω	12
1K	60	SN7430N	—	—	.1µf, 100V	10Ω	11
1K	59	SN7427N	—	—	.33µf, 25V	10K	10
1K	58	SN7410N	—	—	.33µf, 25V	10K	9
—	57	DAC-01-N8	—	IN914A	.047µf, 100V	100Ω	8
20K, ±1%	56	—	—	—	6.8µf, 35V	4.7Ω	7
10K, ±1%	55	—	—	—	6.8µf, 35V	10Ω	6
2.0K	54	—	—	—	6.8µf, 35V	10K	5
10K	53	—	—	—	100pf	51Ω	4
10K, ±1%	52	—	—	—	6.8µf, 35V	2.0K	3
20K, ±1%	51	—	—	—	.01µf, 100V	2.0K	2
							1

NOTES (UNLESS OTHERWISE NOTED)
1. COMPONENT MOUNTING PER INSTITUTE OF PRINTED CIRCUITS IPC-CM-770
2. ALL RESISTORS ARE ¼ W, 5%
3. WHEN MOUNTING Q17 & Q18 USE HEAT SINK COMPOUND AND MICA WASHERS

SEE SEPARATE PARTS LIST

F.C.F. C03320

G3
G4

C12

THREE PHOENIX COMPANY

UNLESS OTHERWISE SPECIFIED
TOLERANCES ON
2-PLACE DECIMALS ±
3-PLACE DECIMALS ±
ANGLES ±
FRACTIONS ±
SURFACE FINISH √

MATERIAL —
HEAT TREAT —
FINISH —

DRAWN BY D. STRAUB
DATE 6/7/76
APPROVED
APPROVED

PWB ASSY, DRIVE CONTROL
TCD 300

C
SCALE 2/1
SHEET 2 OF 2
C01742

THREE PHOENIX COMPANY

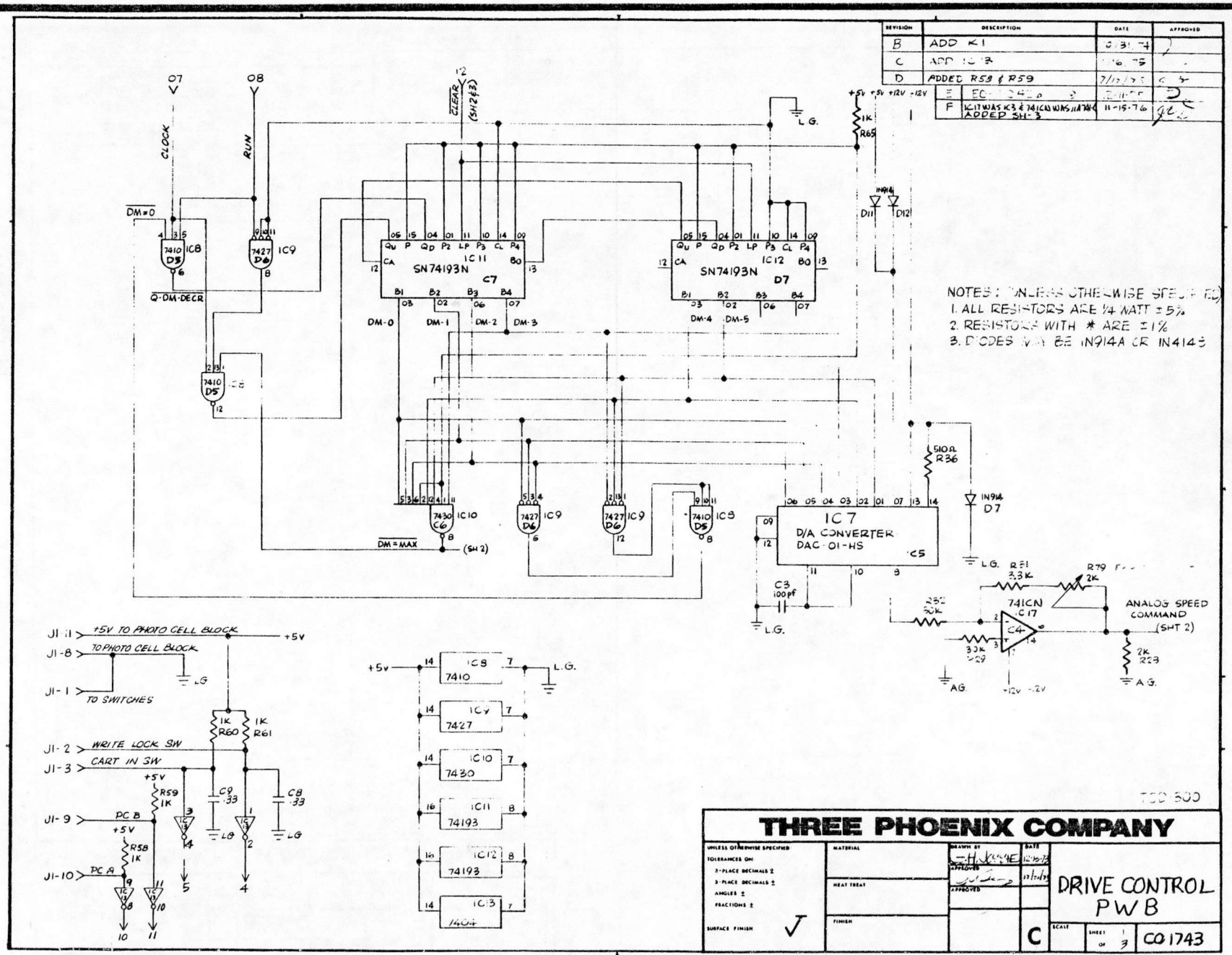
REVISION
DESCRIPTION
DATE
APPROVED
B ADD K1
C ADD IC13
D ADDED R58 & R59
F IC17 WAS IC3 & 741CN WAS 11A741C ADDED SH-3
11-15-76
NOTES: (UNLESS OTHERWISE SPECIFIED)
1. ALL RESISTORS ARE 1/4 WATT ±5%
2. RESISTORS WITH * ARE ±1%
3. DIODES MAY BE IN914A OR IN4148
CLOCK
RUN
CLEAR (SH2&3)
DM=0
Q-DM-DECR
DM=MAX
(SH 2)
SN74193N
IC11
C7
IC12
D7
IC7
D/A CONVERTER
DAC-01-HS
C5
IN914
D7
510Ω R36
741CN
IC17
C4
ANALOG SPEED COMMAND (SHT 2)
+5V TO PHOTO CELL BLOCK
TO PHOTO CELL BLOCK
TO SWITCHES
WRITE LOCK SW
CART IN SW
PC B
PC A
TCD-300
THREE PHOENIX COMPANY
UNLESS OTHERWISE SPECIFIED
TOLERANCES ON:
2-PLACE DECIMALS ±
3-PLACE DECIMALS ±
ANGLES ±
FRACTIONS ±
SURFACE FINISH
MATERIAL
HEAT TREAT
FINISH
DRAWN BY
APPROVED
DATE
DRIVE CONTROL PWB
C
SCALE
SHEET 1 OF 3
CO 1743

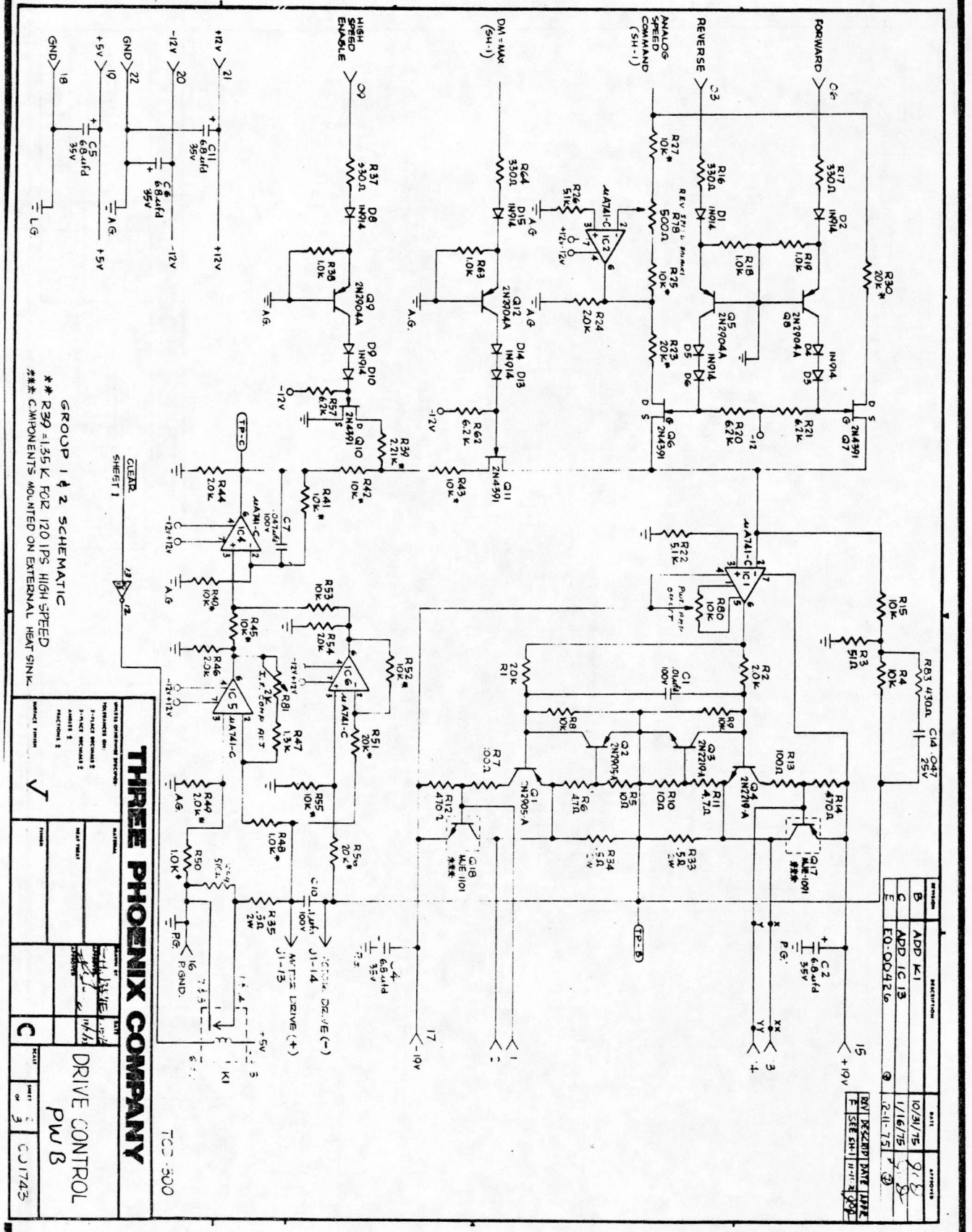

DIGITGRAPH
P. O. Box 4249
Tucson, Arizona 85717

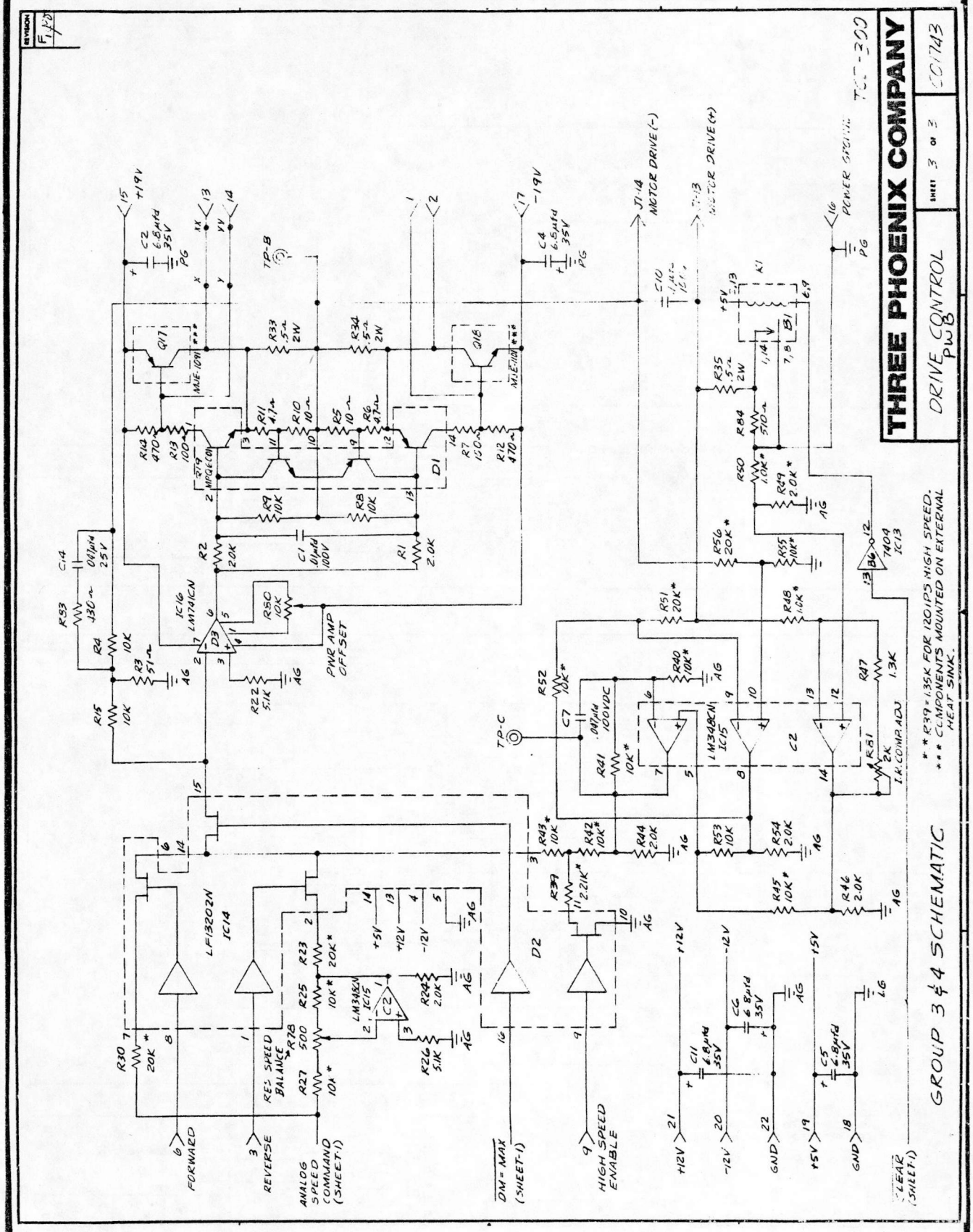

THREE PHOENIX COMPANY

REVISION	DESCRIPTION	DATE	APPROVED
A	ISSUE	10/31/74	
B	EO-00414	6/19/75	

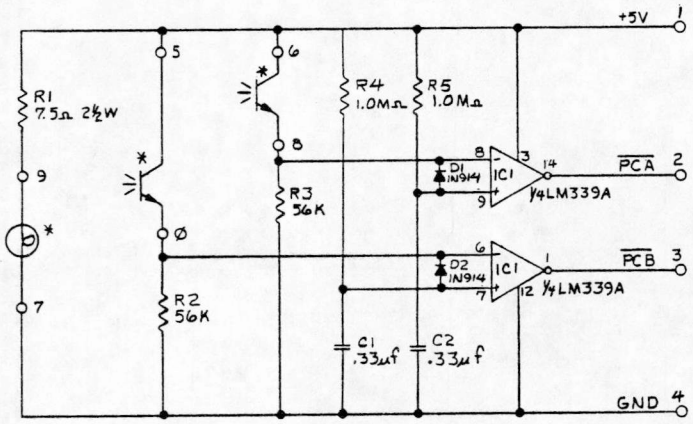

NOTES: UNLESS OTHERWISE SPECIFIED
1. ALL RESISTORS 1/4 W 5%
2. * DENOTES COMPONENTS EXTERNAL TO BOARD
3. ALL UNUSED IC PINS GNDED

THREE PHOENIX COMPANY

UNLESS OTHERWISE SPECIFIED TOLERANCES ON 2-PLACE DECIMALS ± 3-PLACE DECIMALS ± ANGLES ± FRACTIONS ± SURFACE FINISH √	MATERIAL / HEAT TREAT / FINISH	DRAWN BY R FRAHM 10/27/74; APPROVED 10/31/74; APPROVED	BOT/EOT DETECTOR TCD 300
		B	SCALE — SHEET 1 OF 1 — B01774

REVISION	DESCRIPTION	DATE	APPROVED
A	ISSUED	2-28-75	

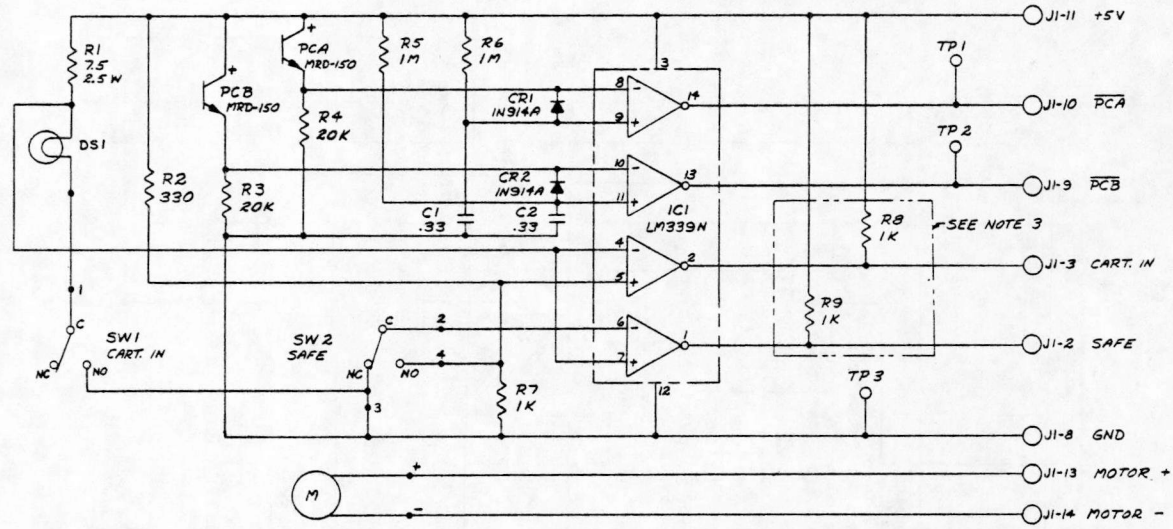

NOTES:
1. ALL RESISTORS ARE IN OHMS, ±5%, 1/4 W
2. ALL CAPACITORS ARE IN MICROFARADS, 25 V
3. R8 & R9 NOT USED ON GROUP 1

THREE PHOENIX COMPANY

UNLESS OTHERWISE SPECIFIED TOLERANCES ON 2-PLACE DECIMALS ± 3-PLACE DECIMALS ± ANGLES ± FRACTIONS ± SURFACE FINISH √	MATERIAL — / HEAT TREAT — / FINISH —	DRAWN BY D. STRAUB 7/11/75; APPROVED; APPROVED	PHOTOCELL PWB SCHEMATIC TCD-300
		B	SCALE NONE — SHEET 1 OF 1 — B01831

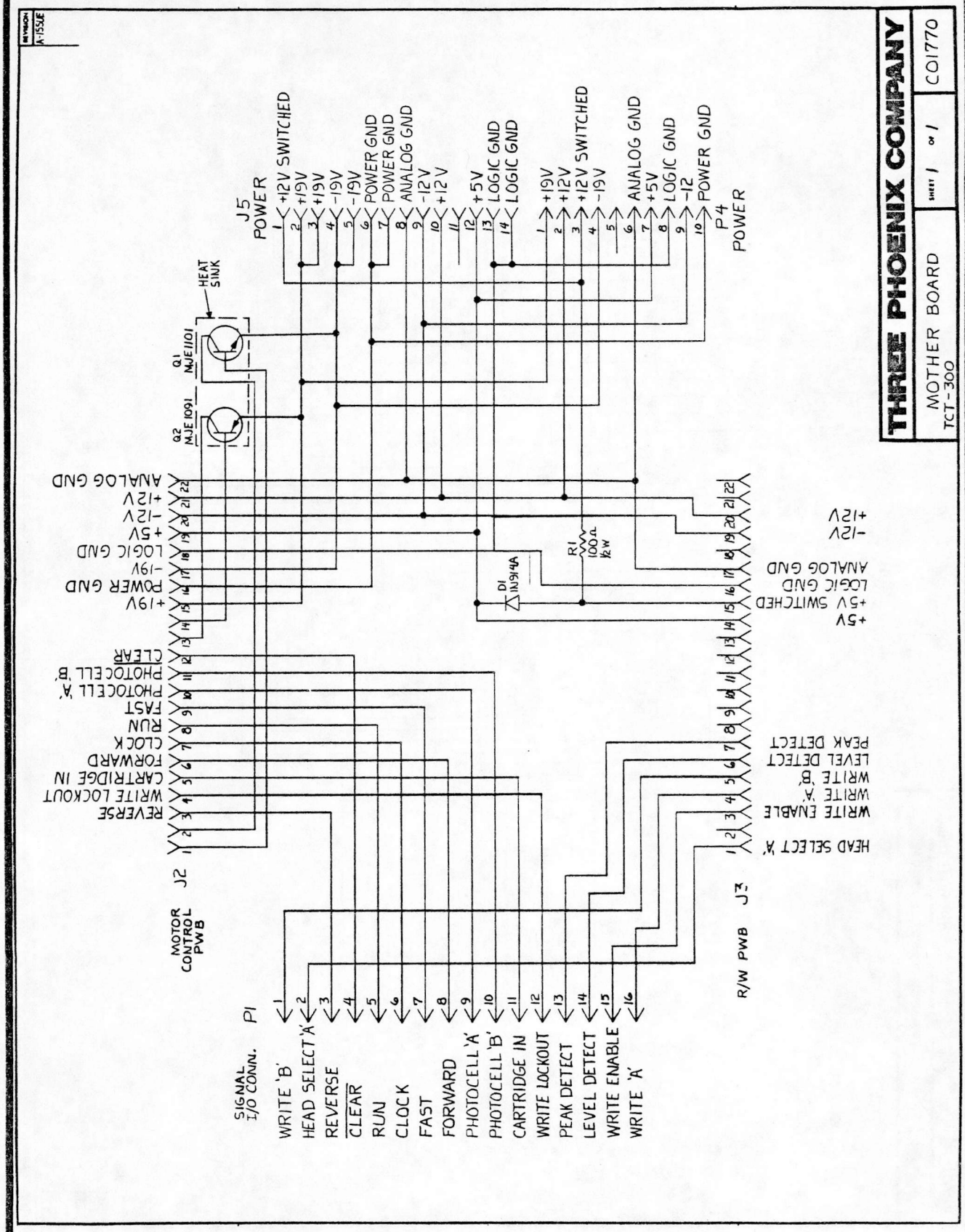
THREE PHOENIX COMPANY
MOTHER BOARD
TCT-300
SHEET 1 OF 1
C01770
REVISION A-155JE
J5 POWER
+12V SWITCHED
+19V
+19V
-19V
-19V
POWER GND
POWER GND
ANALOG GND
-12V
+12V
+5V
LOGIC GND
LOGIC GND
P4 POWER
+19V
+12V
+12V SWITCHED
-19V
ANALOG GND
+5V
LOGIC GND
-12
POWER GND
HEAT SINK
Q1 MJE1101
Q2 MJE1091
D1 1N914A
R1 100Ω 2W
MOTOR CONTROL PWB
J2
REVERSE
WRITE LOCKOUT
CARTRIDGE IN
FORWARD
CLOCK
RUN
FAST
PHOTOCELL 'A'
PHOTOCELL 'B'
CLEAR
+19V
POWER GND
-19V
LOGIC GND
+5V
-12V
+12V
ANALOG GND
R/W PWB J3
HEAD SELECT 'A'
WRITE ENABLE
WRITE 'A'
WRITE 'B'
LEVEL DETECT
PEAK DETECT
+5V SWITCHED
LOGIC GND
ANALOG GND
-12V
+12V
SIGNAL I/O CONN. P1
WRITE 'B'
HEAD SELECT 'A'
REVERSE
CLEAR
RUN
CLOCK
FAST
FORWARD
PHOTOCELL 'A'
PHOTOCELL 'B'
CARTRIDGE IN
WRITE LOCKOUT
PEAK DETECT
LEVEL DETECT
WRITE ENABLE
WRITE 'A'

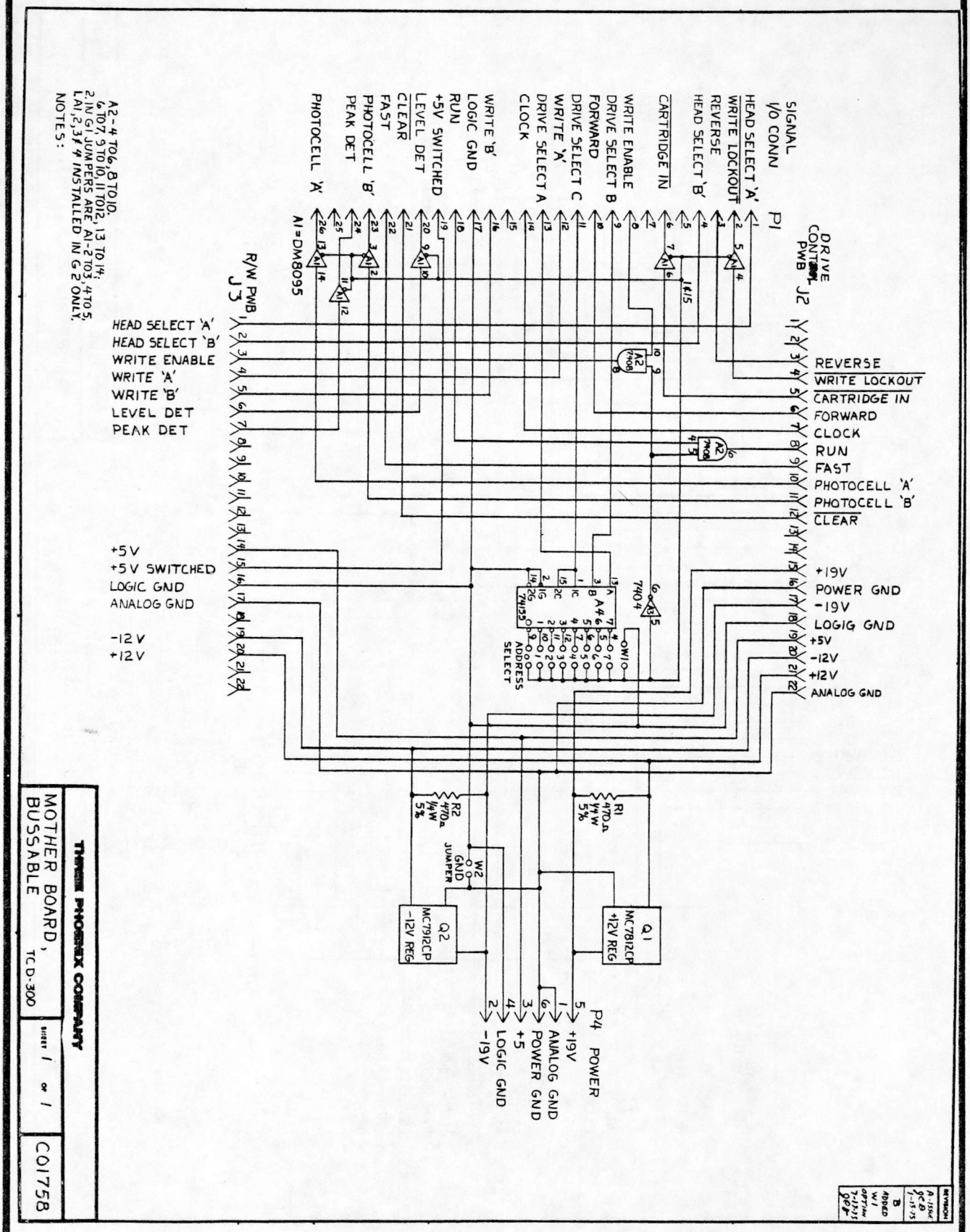

THREE PHOENIX COMPANY

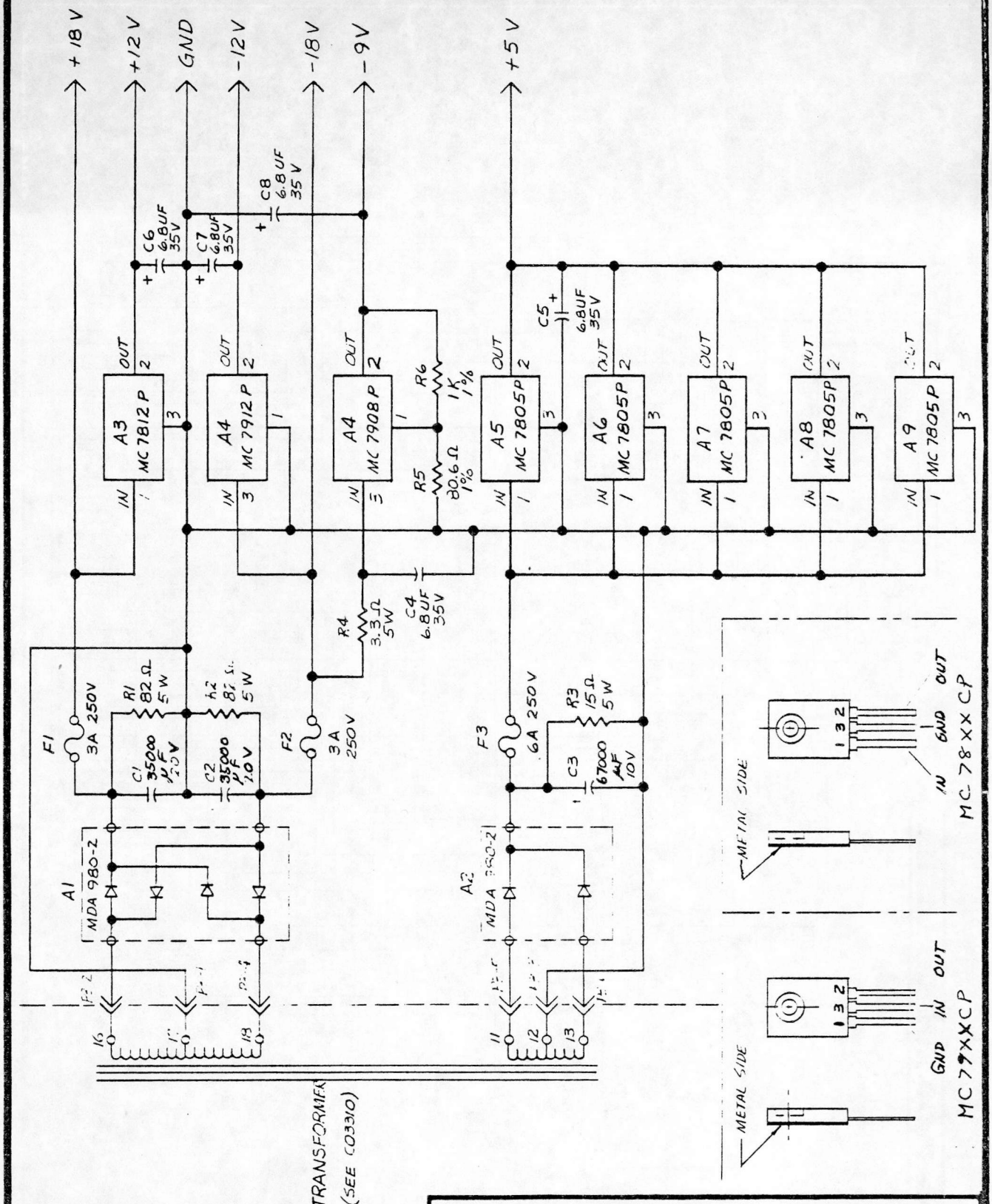

THREE PHOENIX COMPANY		
POWER SUPPLY TCT 300 SCHEM	SHEET 1 OF 1	C01747

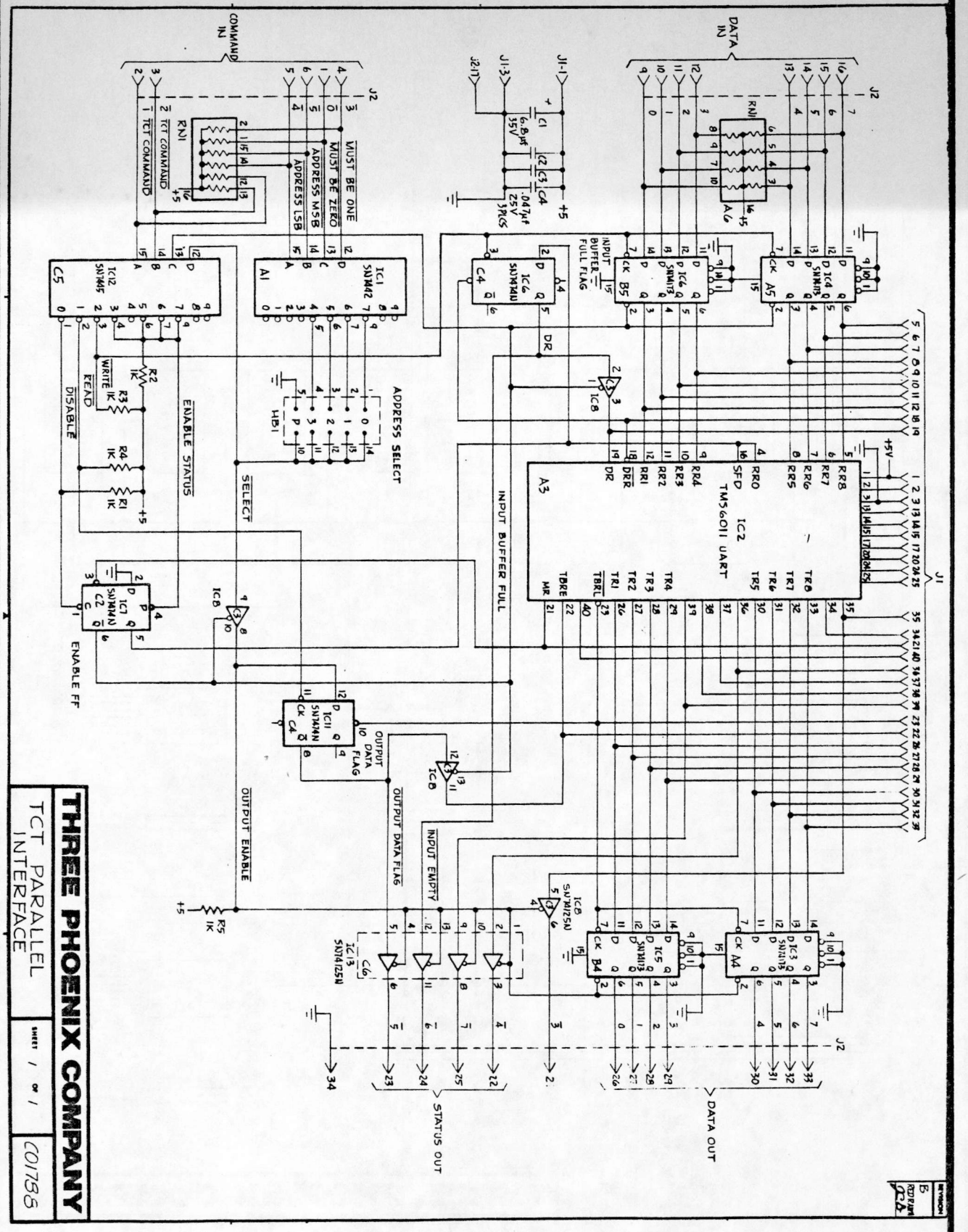

THREE PHOENIX COMPANY

TCT PARALLEL INTERFACE	SHEET 1 OF 1	C0175

THREE PHOENIX COMPANY

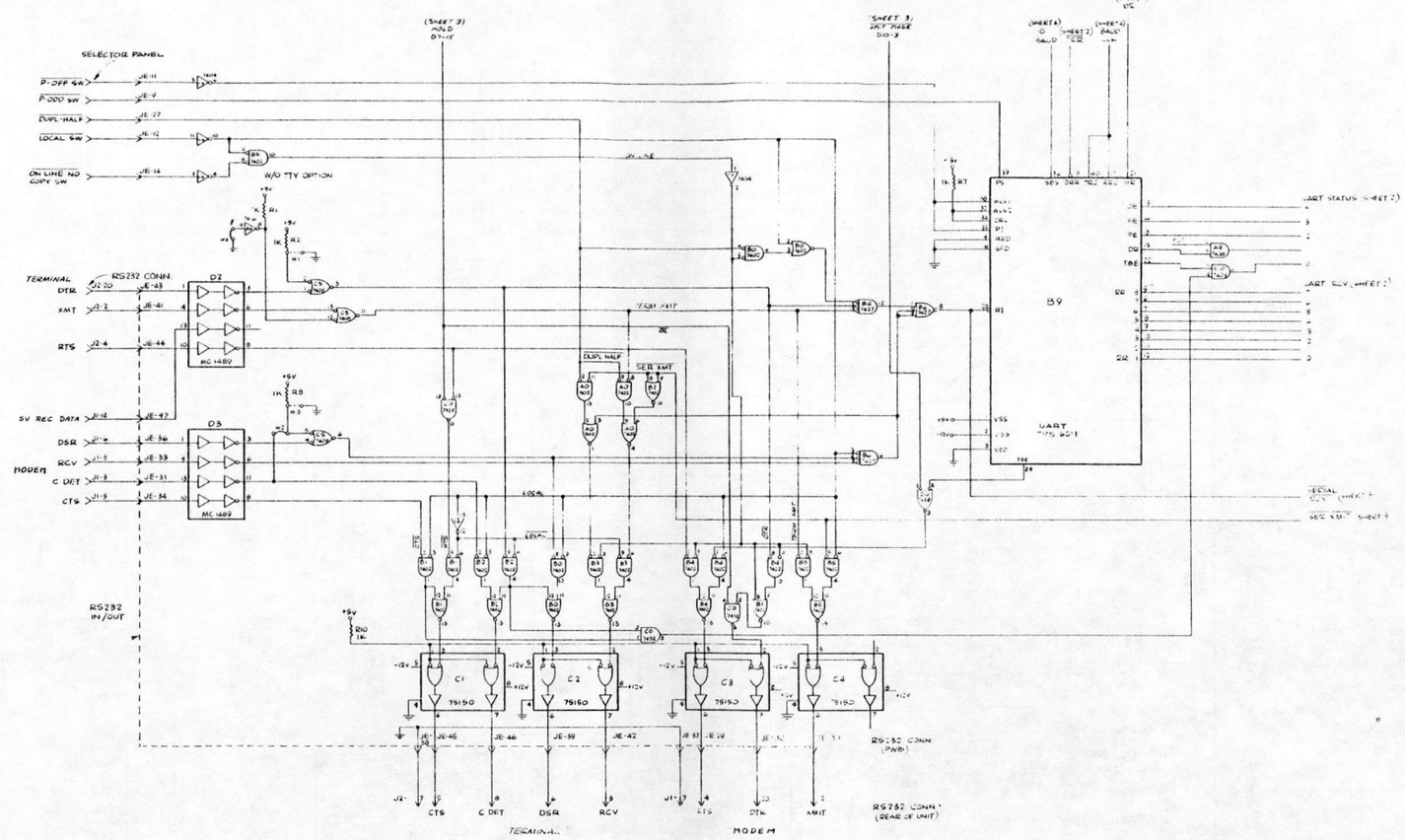

C21

THREE PHOENIX COMPANY

CT-I/O PWB

E01729

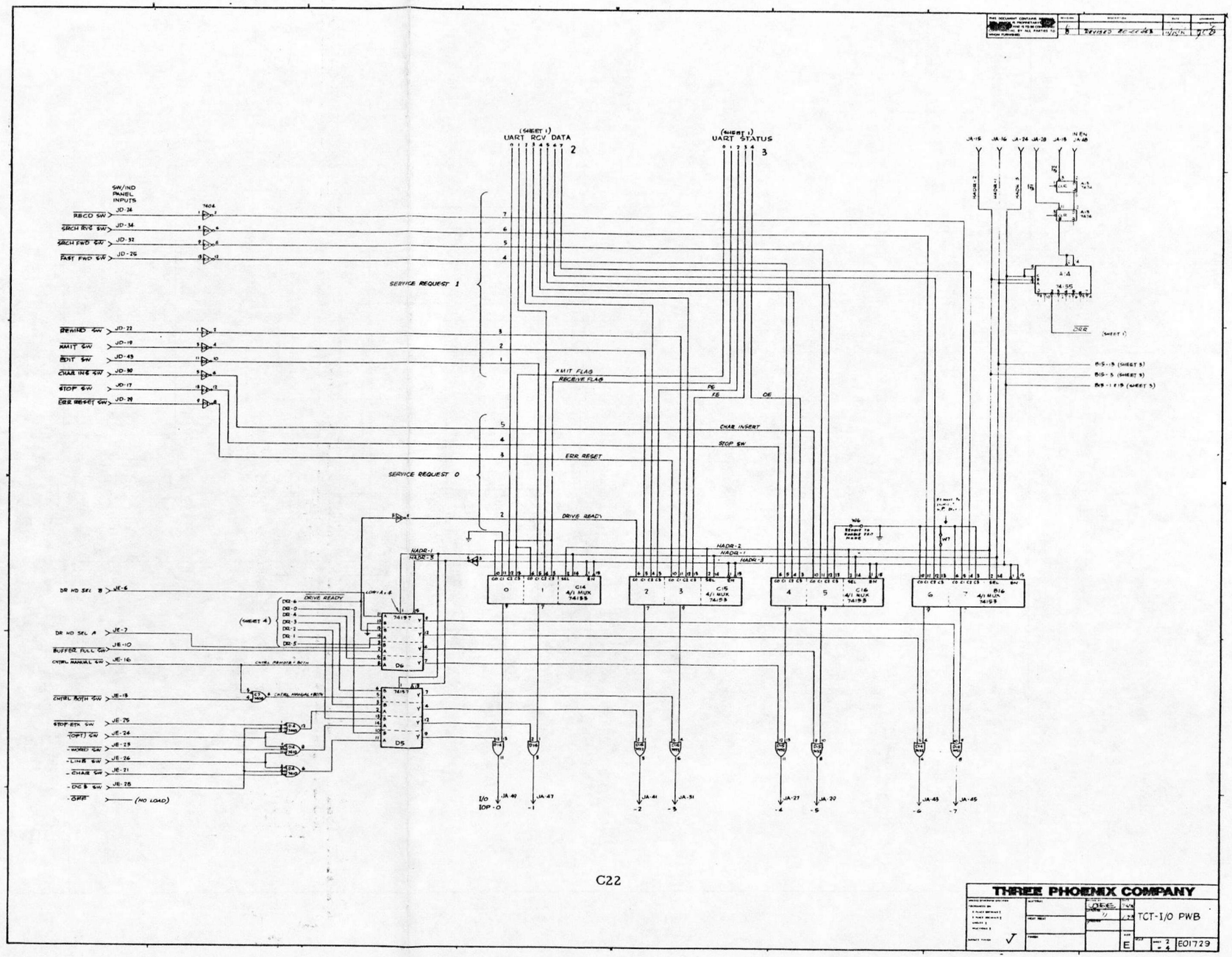

C22

THREE PHOENIX COMPANY

TCT-I/O PWB

E01729

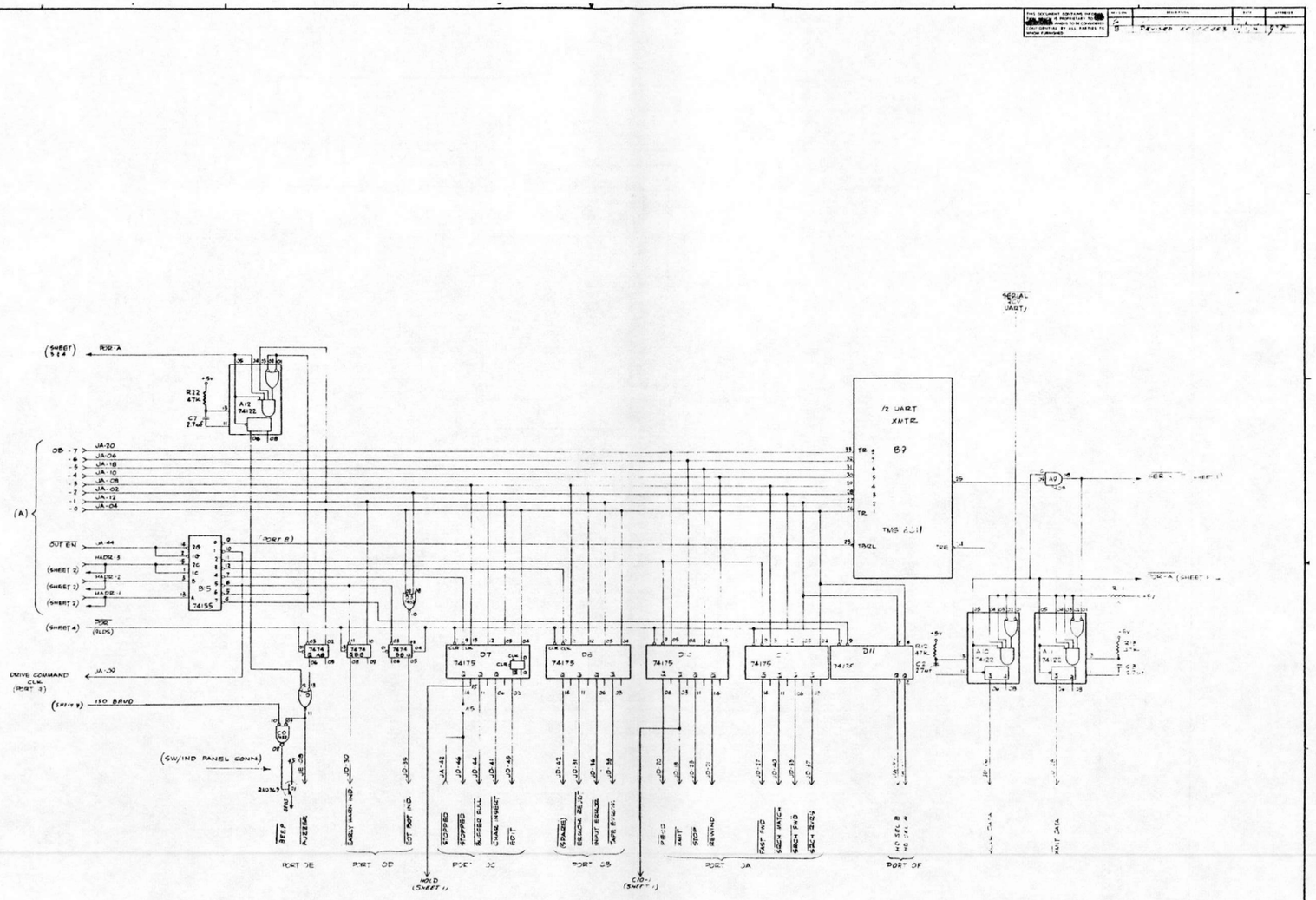

C23

THREE PHOENIX COMPANY

STD P/B

E

E01723

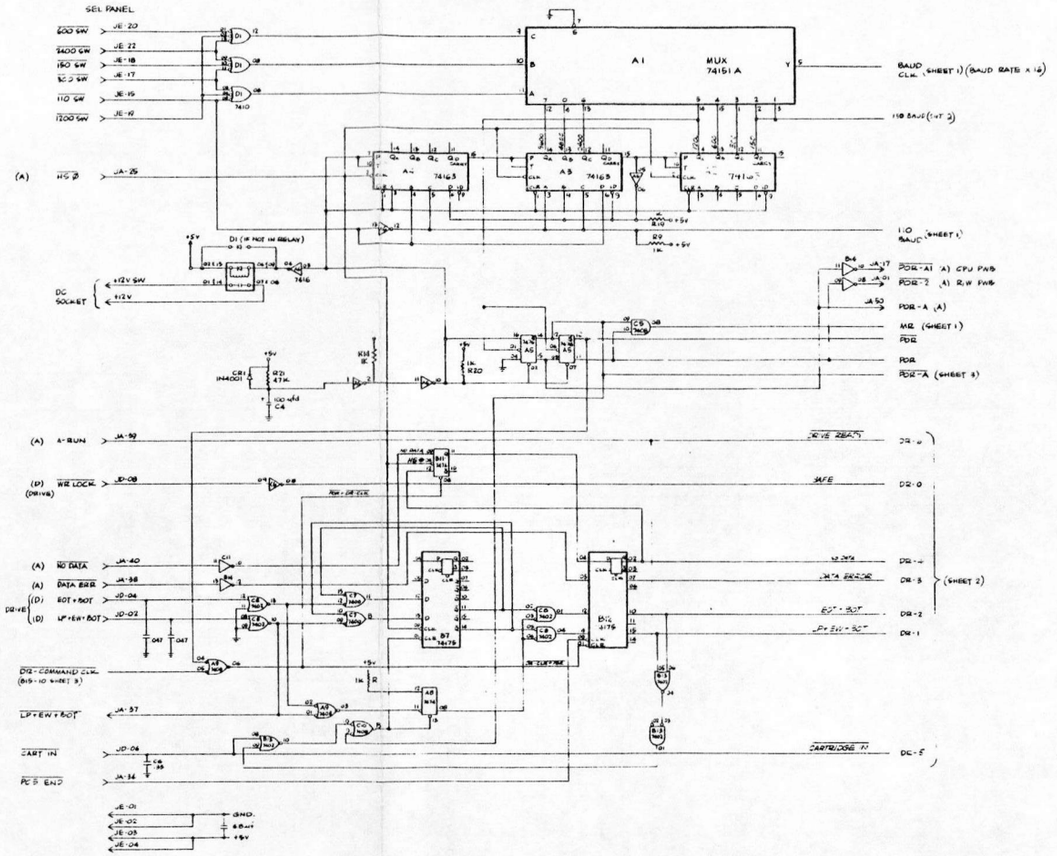

C24

THREE PHOENIX COMPANY

TCT-I/O PWB

E01729

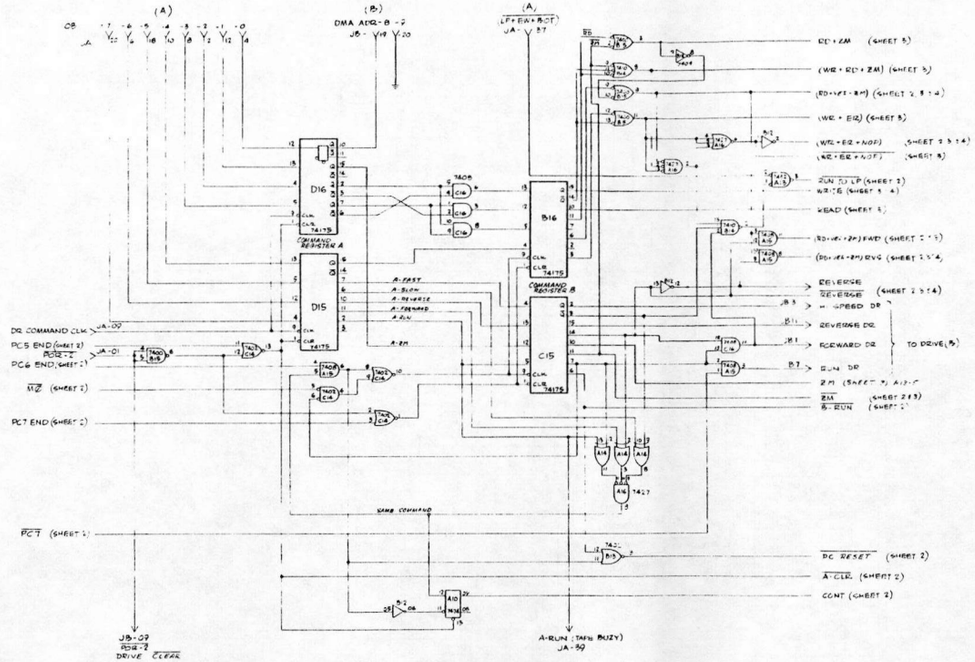

C25

THREE PHOENIX COMPANY

PCT R/W PWB

E01737

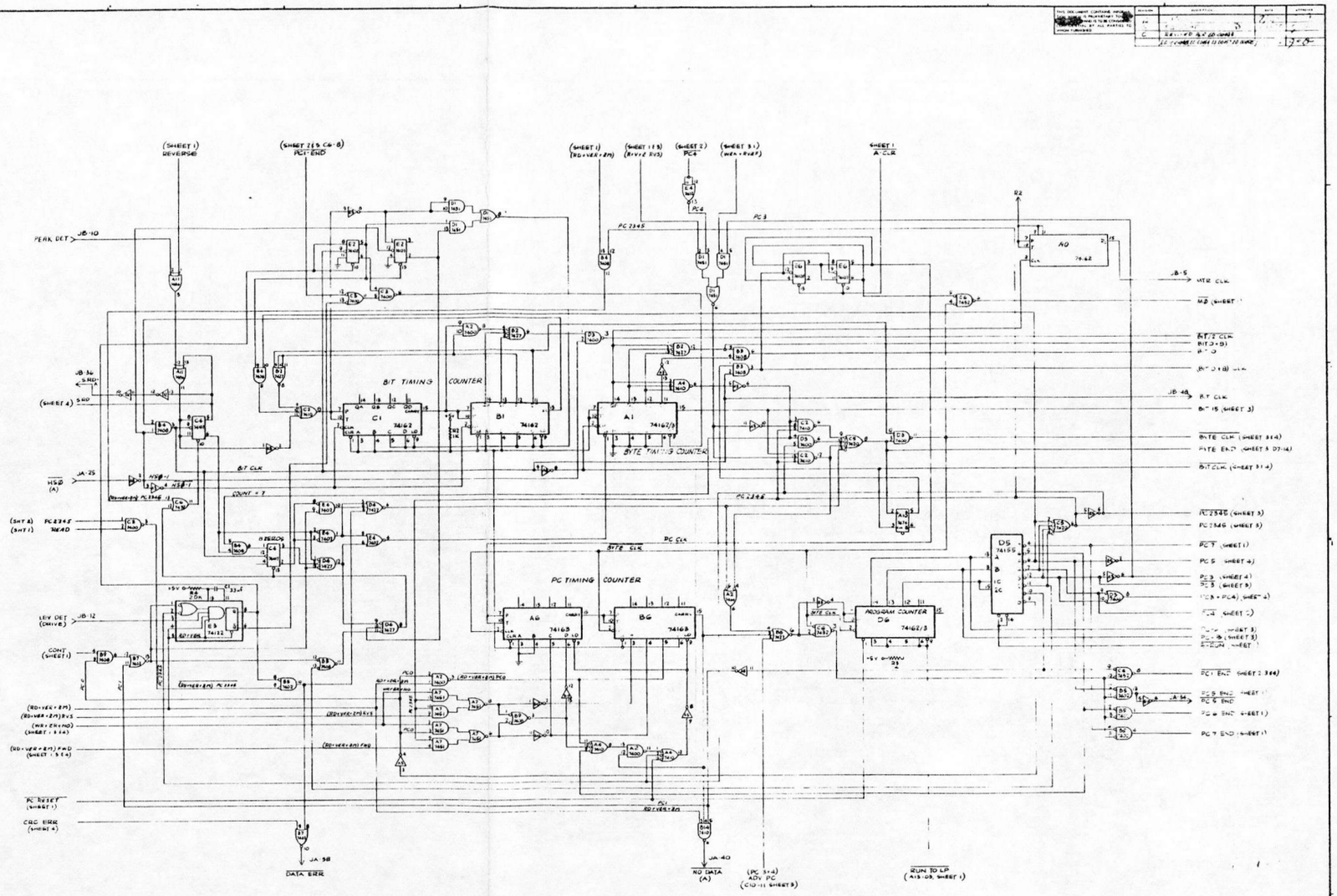
THREE PHOENIX COMPANY
TCT-R/W PWB
601737
BIT TIMING COUNTER
BYTE TIMING COUNTER
PC TIMING COUNTER
PEAK DET
REVERSE
PCT END
PC RESET
CRC ERR
DATA ERR
NO DATA
RUN TO LP

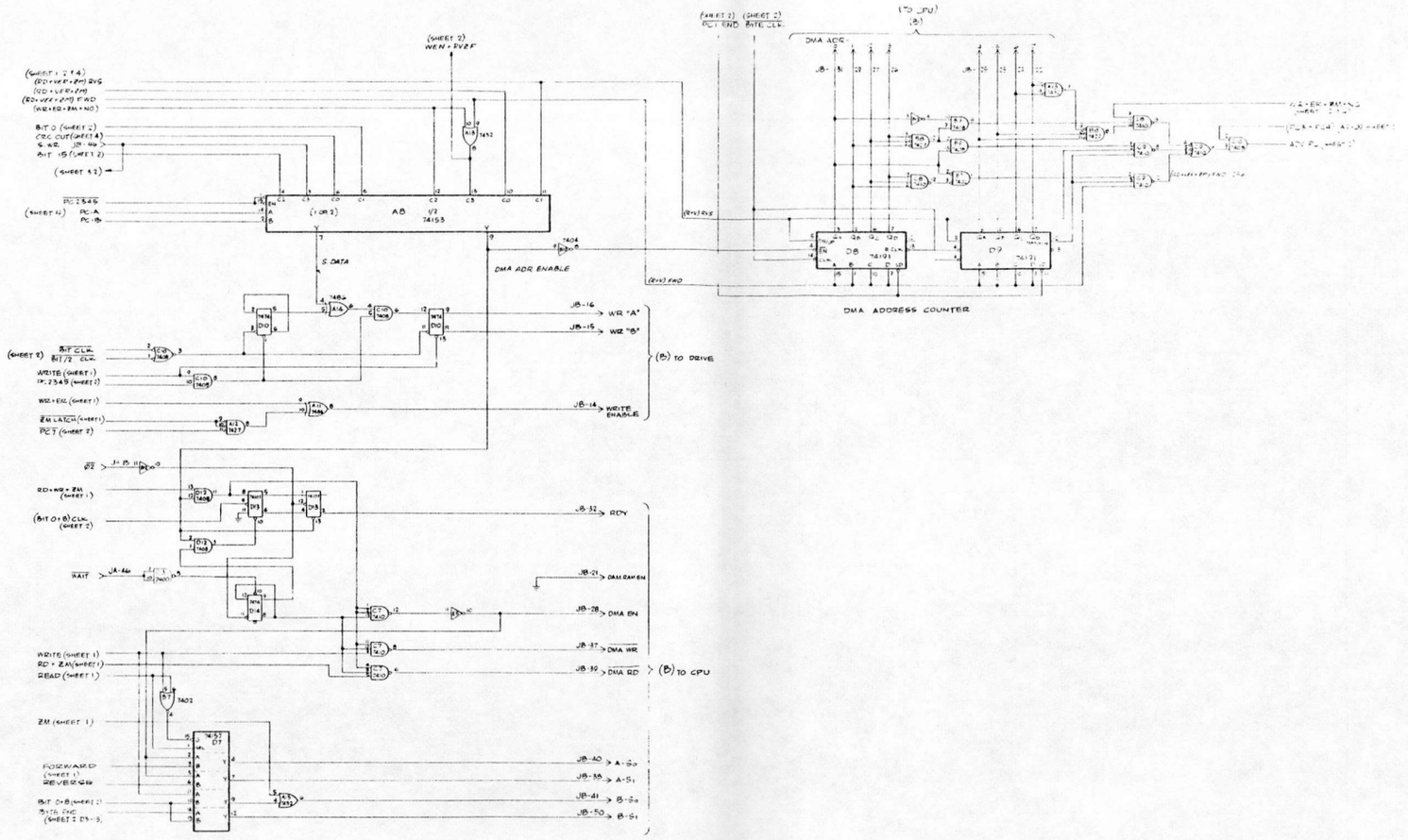

C27

THREE PHOENIX COMPANY

TCT-R/W PWB

E

E01737

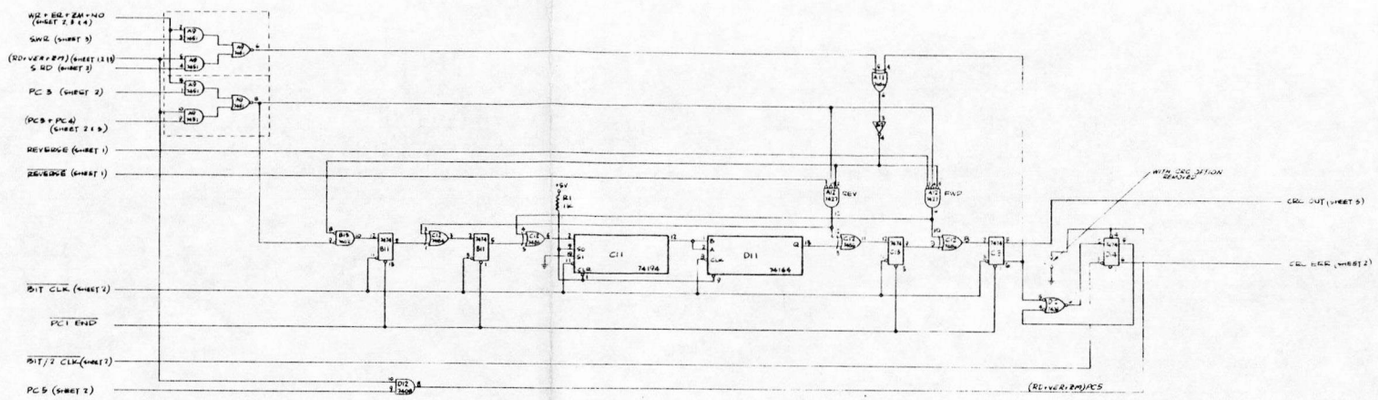

DIGITGRAPH
P. O. Box 4249
Tucson, Arizona 85717

THREE PHOENIX COMPANY

TCT-R/W PWB

E01737

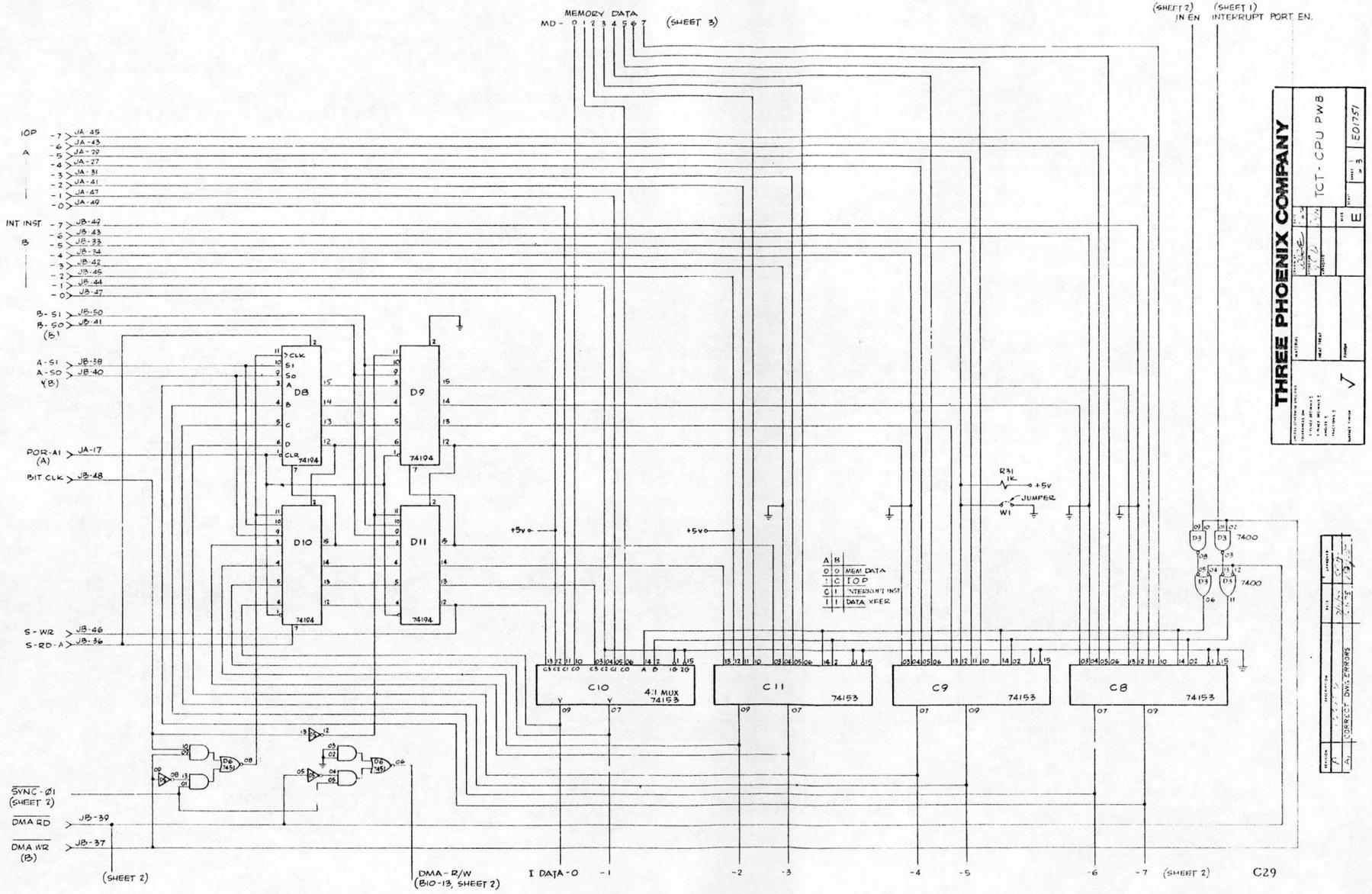
MEMORY DATA
MD - 0 1 2 3 4 5 6 7
(SHEET 3)
(SHEET 2) IN EN
(SHEET 1) INTERRUPT PORT EN.
IOP A
INT INST B
JA-45
JA-43
JA-29
JA-27
JA-31
JA-41
JA-47
JA-49
JB-47
JB-43
JB-33
JB-34
JB-42
JB-45
JB-44
JB-47
B-S1 JB-50
B-S0 JB-41 (B)
A-S1 JB-38
A-S0 JB-40 (B)
POR-A1 JA-17 (A)
BIT CLK JB-48
S-WR JB-46
S-RD-A JB-36
SYNC-Ø1 (SHEET 2)
DMA RD JB-39
DMA WR JB-37 (B)
(SHEET 2)
DMA-R/W (B10-13, SHEET 2)
D8
D9
D10
D11
74104
+5v
R31 1K
+5v
JUMPER
W1
A B
0 0 MEM DATA
0 1 IOP
1 0 INTERRUPT INST
1 1 DATA KEEP
C10 4:1 MUX 74153
C11 74153
C9 74153
C8 74153
D3 7400
D4 7400
I DATA-0 -1 -2 -3 -4 -5 -6 -7 (SHEET 2)
C29
THREE PHOENIX COMPANY
TCT-CPU PWB
E
E01751
INCORRECT DWG ERRORS

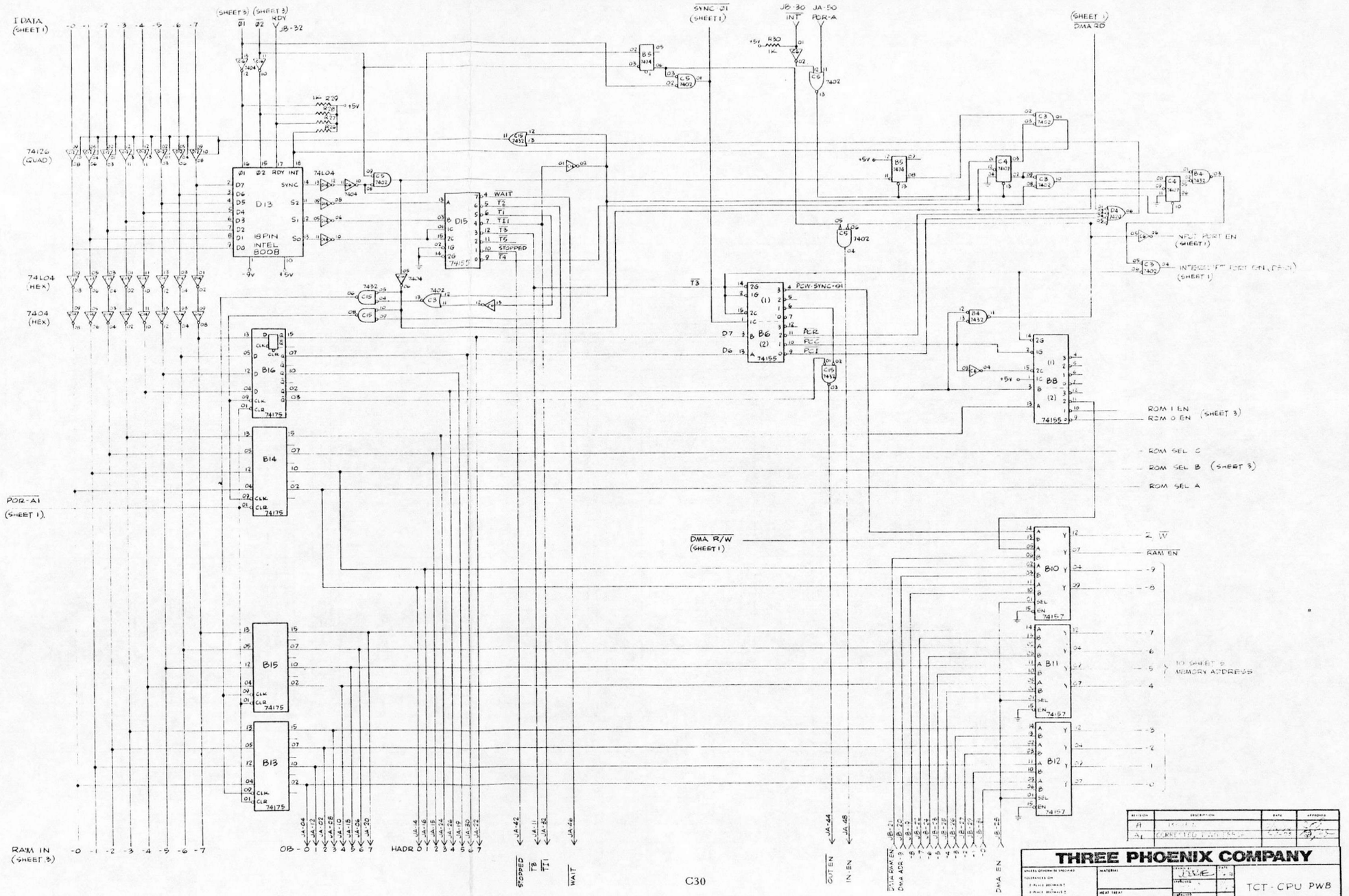
I DATA (SHEET 1)
(SHEET 3) (SHEET 3) RDY
Ø1 Ø2 JB-32
74126 (QUAD)
74L04 (HEX)
7404 (HEX)
D13
8 PIN INTEL 8008
Ø1 Ø2 RDY INT
SYNC S2 S1 S0
D7 D6 D5 D4 D3 D2 D1 D0
-9V +5V
74L04
7404
D15
74155
WAIT T2 T1 T1I T5 T6 STOPPED T4
SYNC -Z1 (SHEET 1)
JB-30 INT
JA-50 POR-A
+5V R30 1K
7402
(SHEET 1) DMA RD
+5V R29 1K
+5V R27 1K
+5V R28 1K
7432
7408
7410
7400
7427
7420
7430
7404
7402
7486
7474
7427
7410
7408
7432
7400
7404
7402

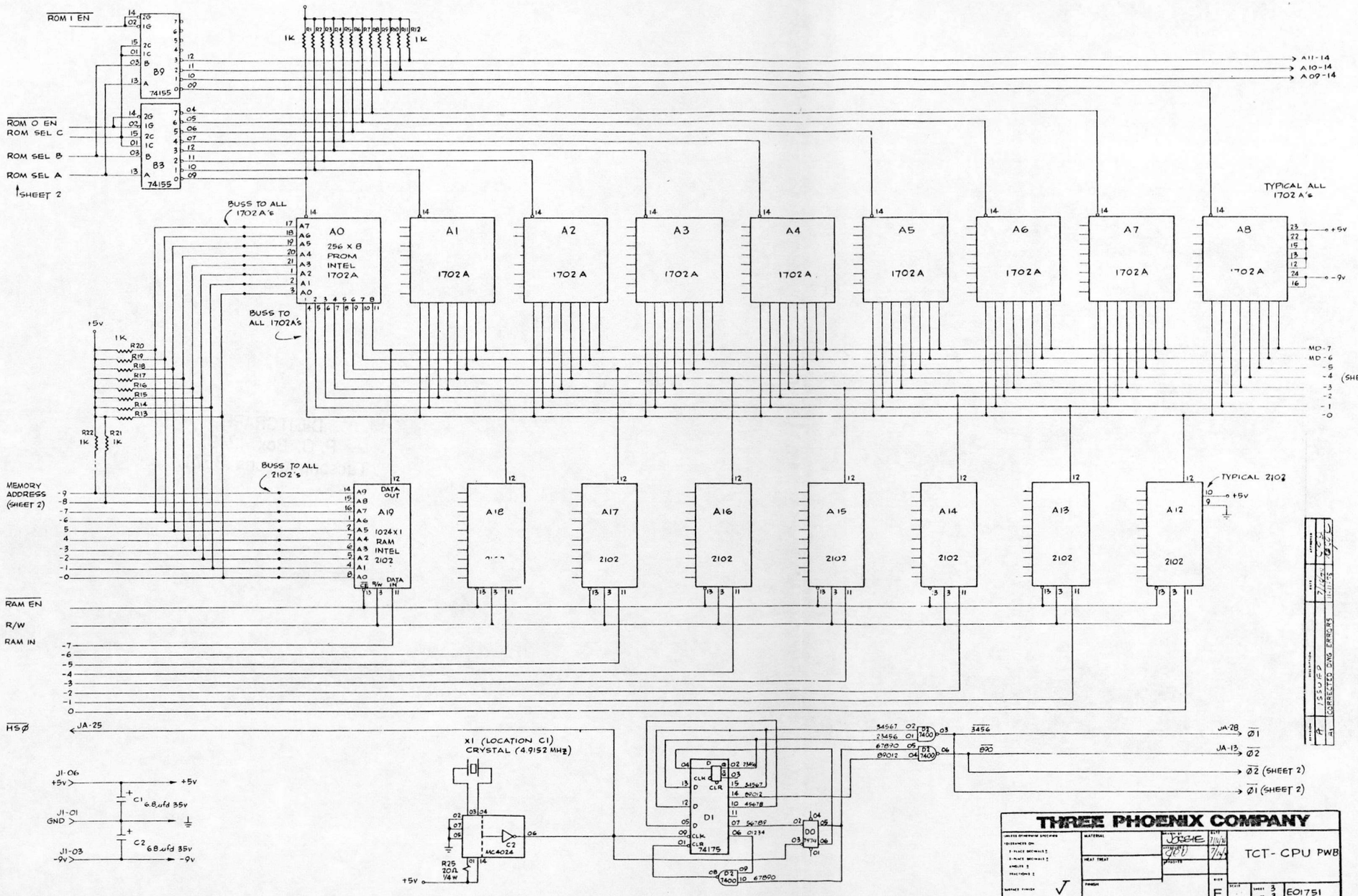

THREE PHOENIX COMPANY

TCT- CPU PWB

E01751

C31

DIGITGRAPH
P. O. Box 4249
Tucson, Arizona 85717

Ling Form No. 65-318

TCT 300 OUTPUT PORTS

	Bit→ 7	6	5	4	3	2	1	0
UART XMIT DATA 08	P	7	6	5	4	3	2	1
TAPE DRIVE COMMANDS 09	RUN	REVERSE	FAST	ERASE	READ OR VERIFY	WRITE OR VERIFY	ZERO MEMORY	BUFFER ADDR BITS
INDICATORS GROUP 1 0A	RECORD	XMIT	STOP	REWIND	FAST FWD	SRCH MATCH	SRCH FWD	SRCH REV
INDICATORS GROUP 2 0B					HOLD	ERROR RESET	INPUT TAPE ERROR	TAPE ERROR
INDICATORS GROUP 3 0C					HOLD	BUFFER FULL	CHAR INSRT	EDIT
INDICATORS GROUP 4 0D						EOT	EW	BOT
INDICATORS GROUP 5 0E							ONE SHOT BUZZER	BUZZER
DRIVE AND TRACK SELECTOR 0F					DRIVE SEL B	DRIVE SEL A	HD SEL B	HD SEL A

Litho Form No. 65-208

TCT300 RAM VARIABLES

NAME	BIT→ 7	6	5	4	3	2	1	0
CURBUF	BUFFER FULL OR OVFLOW	BUFF MODIFIED	0	BUF NOT EMPTY	0	0	0	BUF ADDR BIT 8
(REQUEST STATUS RESPONSE)	0	CART IN & READY	SAFE	SRCH MOTION	INPUT ERROR	TAPE ERROR	EW	EOT BOT

TTY Line Form No. 65-208

TCT300 INPUT PORTS

BIT →	7	6	5	4	3	2	1	0
SERVICE REQUEST REGISTER #1 00	WRT BUFFER	REQ STATUS	CHAR INSERT SW	STOP SW	ERROR RESET SW	TAPE DRIVE READY	XMIT DATA FLAG	RECV DATA FLAG
SERVICE REQUEST REGISTER #2 01	RECORD SW	SRCH REV SW	SRCH FWD SW	FAST FWD SW	REWIND SW	XMIT SW	EDIT SW	ERASE
UART RECIEVE DATA 02	P	7	6	5	4	3	2	1
UART STATUS 03				OVER-RUN ERROR	FRAMING ERROR	PARITY ERROR	RECV DATA FLG	XMIT DATA FLG
SELECTOR PANEL SWITCHES 04	DRIVE HEAD SELECT B	DRIVE HEAD SELECT A	BUFFER CMPR	REMOTE OR BOTH	MANUAL OR BOTH	STOP SWITCH POSITION		SCL *
TAPE DRIVE STATUS 05		DRIVE BUSY	CART OUT	NO DATA	ERROR	EOT OR BOT	LP, EW, OR BOT	SAFE
06								
07								

* 000 = OFF
001 = CHAR
010 = WORD
011 = LINE
100 = ETX
101 = DC3
110 = CR

```
;
;
;
;;;
```

```
                                MOV     A,M
                                ORI     V1
                                MOV     M,A
                                ENDM
                ;
                ;
                LAD     MACRO   V1
                                MVI L,V1 AND OFFH
                        ENDM
                ;
                ;
                ;
                ;
                ;
                ;
                ;
                ;
                ;
                ;
                ;       **** LINKAGE AND RAM ADDRESSES ****
                ;
                ;
                ;
                ;
0000                    ORG     0A00H
0A00            SUOPT:  DS      1
0A01                    ORG     0B00H
0B00            MEMDMP: DS      1
0B01                    ORG     1000H
1000            BUF0:   DS      256
1100            BUF1:   DS      256
1200                    ORG     13D0H
13D0            CURBUF: DS      1
13D1            BUFPTR: DS      1
13D2            IND1:   DS      1
13D3            IND2:   DS      1
13D4            IND3:   DS      1
13D5            IND4:   DS      1
13D6            EDIFLG: DS      1
13D7            XMTDLY: DS      1
13D8            ESCFLG: DS      1
13D9            POSIT:  DS      1
13DA            SAVREG: DS      4
13DE            STPCHR: DS      1
13DF            CPRCNT: DS      1
13E0            CPRLEN: DS      1
13E1            CPRREG: DS      16
13F1            SAVSRQ: DS      2
13F3            REMRQ:  DS      2
13F5            TERCNT: DS      1
13F6            SAVLC:  DS      1
13F7            RXFLG:  DS      1
13F8            XLRCA:  DS      1
13F9            RLRCA:  DS      1
13FA            STXFL:  DS      1
13FB            STPSW:  DS      1
13FC            HOLDFL: DS      1
13FD            CANFLG: DS      1
13FE            TRACK:  DS      1
                ;
                ;
                ;
                ;
                ;
                ;
```

```
                                MOV     A,M
                                ORI     V1
                                MOV     M,A
                                ENDM
                ;
                ;
                LAD     MACRO   V1
                                MVI L,V1 AND OFFH
                        ENDM
                ;
                ;
                ;
                ;
                ;
                ;
                ;
                ;
                ;
                ;       **** LINKAGE AND RAM ADDRESSES ****
                ;
                ;
                ;
0000                    ORG     0A00H
0A00            SUOPT:  DS      1
0A01                    ORG     0B00H
0B00            MEMDMP: DS      1
0B01                    ORG     1000H
1000            BUF0:   DS      256
1100            BUF1:   DS      256
1200                    ORG     13D0H
13D0            CURBUF: DS      1
13D1            BUFPTR: DS      1
13D2            IND1:   DS      1
13D3            IND2:   DS      1
13D4            IND3:   DS      1
13D5            IND4:   DS      1
13D6            EDIFLG: DS      1
13D7            XMTDLY: DS      1
13D8            ESCFLG: DS      1
13D9            POSIT:  DS      1
13DA            SAVREG: DS      4
13DE            STPCHR: DS      1
13DF            CPRCNT: DS      1
13E0            CPRLEN: DS      1
13E1            CPRREG: DS      16
13F1            SAVSRQ: DS      2
13F3            REMRQ:  DS      2
13F5            TERCNT: DS      1
13F6            SAVLC:  DS      1
13F7            RXFLG:  DS      1
13F8            XLRCA:  DS      1
13F9            RLRCA:  DS      1
13FA            STXFL:  DS      1
13FB            STPSW:  DS      1
13FC            HOLDFL: DS      1
13FD            CANFLG: DS      1
13FE            TRACK:  DS      1
                ;
                ;
                ;
                ;
                ;
                ;
```

```
                        ;
                        ;
                        ;       MAIN PROGRAM STARTS HERE WITH POWER UP
                        ;
                        ;
13FF                            ORG     0
0000 2E14                       MVI     H,14H           ;GET RAM BASE ADDRESS
0002 A8                         XRA     A
0003 F8         CLRAM:  MOV     M,A     ;STORE ZEROS
0004 30                 INR     L       ;STEP ADDRS
0005 480300             JNZ     CLRAM   ;IF NOT FINISHED LOOP AGAIN
0008 29                 DCR     H       ;COUNT BANKS
0009 4A0300             CNZ     CLRAM   ;IF MORE LOOP BACK
000C 465602             CALL    STSTOP  ;TURN ON STOP INDICATOR
000F 2E0A3600           LXI     H,SUOPT ;CHECK START UP OPTION
0013 CF                 MOV     B,M
0014 08                 INR     B
0015 442300             JMP     23H     ;SKIP OVER INTERRUPT VECTOR

                        ;
0018 465602     ABORT:  CALL    STSTOP  ;SET STOPMODE
001B 2D                 RST     LOOP SHR 3
001C 441B00             JMP     $-1
                        ;
                        ;
                        ;
001F                            ORG     20H
0020 44000B                     JMP     MEMDM;  RESTART VECTOR FOR MEMORY DUMP
                        ;
0023 2E1336F3                   LXI     H,REMRQ2
0027 F9                 MOV     M,B
                        ;
                        ;
                        ;
                        ;
                                ;IDLE LOOP AND DISPATCHER
                        ;
0028 2E1336F2   LOOP:   LXI     H,SAVSRQ+1      ;POINT TO SRQ1+1
002C 41                 IN      0       ;GET SERVICE REQ REG 0
002D C8                 MOV     B,A
002E A7                 ANA     M
002F F9                 MOV     M,B
0030 A9                 XRA     B
0031 31                 DCR     L       ;POINT TO SAVSRQ
0032 B7                 ORA     M
0033 F8                 MOV     M,A     ;SAVE IT
0034 68B900             JZ      CKCI    ;IF NO REQ CHECK CART IN SW
0037 0A                 RRC
0038 601803             JC      RECFLG
003B 0A         LOOP4:  RRC
003C 600504             JC      XMTFLG
003F 0A         LOOP1:  RRC
0040 60FE00             JC      TAPEND
0043 0A                 RRC
0044 606304             JC      RSETSW
0047 0A                 RRC
0048 60DD00             JC      STOPSW
004B 0A                 RRC
                                IF  F103 OR F101
004C 606006             JC      CHRINS
                                ENDIF
                                IF  F104 OR F105
004F 0A                 RRC
0050 605A07             JC      RQSTAT
0053 0A                 RRC
```

```
0054 608B07             JC      WBUF
                                ENDIF
                LOOP3:  LAD     IND1    ;ARE WE STOPPED?
0057 36D2                       MVI L,IND1 AND OFFH

0059 C7                 MOV     A,M
005A 2420               ANI     20H
                                IF  NOT (F104 OR F105)
                        JZ      LOOP
                                ENDIF
                                IF  F104 OR F105
005C 68AD00             JZ      LOOP2   ;IF NOT GO CHECK ERASE
005F 49                 IN      4       ;GET STATIC SWITCHES
0060 2408               ANI     010Q
                                ENDIF
0062 43                 IN      1       ;GET SERV REQ 2
                                IF  F104 OR F105
0063 486700             JNZ     $+4     ;IF IN MANUAL MODE DONT
0066 A8                 XRA     A       ;RESET
                                ENDIF
                        LAD     REMRQ2+1
0067 36F4                       MVI L,013F4H AND OFFH

0069 C8                 MOV     B,A
006A A7                 ANA     M
006B A9                 XRA     B
006C F9                 MOV     M,B
006D 31                 DCR     L
006E B7                 ORA     M       ;OR IN REMOTE CONTROL
006F 3E00               MVI     M,0
0071 682800             JZ      LOOP    ;IF NO REQUESTS  EXIT
                        LAD     IND1
0074 36D2                       MVI L,IND1 AND OFFH

0076 0A                 RRC
                                IF  F104 OR F105
0077 609A07             JC      ERASE
                                ENDIF
007A 0A                 RRC
                                IF  F102
007B 604205             JC      EDITSW
                                ENDIF
007E 0A                 RRC
007F 607204             JC      XMITSW  ;TRANSMIT SWITCH
0082 0A                 RRC
0083 60D304             JC      REWIND
0086 0A                 RRC
0087 602905             JC      FFWDSW
008A 0A                 RRC
                                IF  F100
008B 608105             JC      SRCHFW
                                ENDIF
008E 0A                 RRC
                                IF  F100
008F 60DB05             JC      SRCHRV
                                ENDIF
0092 0A                 RRC
0093 402800             JNC     LOOP
0096 468902             CALL    RECORD
                        LAD     IND4
0099 36D5                       MVI L,IND4 AND OFFH

009B C7                 MOV     A,M
009C 0A                 RRC
009D 402800             JNC     LOOP    ;IF NOT BOT EXIT
00A0 46EA02             CALL    RSTBO   ;TURN OFF BOT
```

```
00A3 0690              MVI     A,90H   ;ERASE INITIAL GAP
00A5 46E200            CALL    TAPEIO
00A8 C1                MOV     A,B
00A9 46E200            CALL    TAPEIO
00AC 2D                RST     LOOP SHR 3
                ;
                                       IF  F104 OR F105
                LOOP2:  LAD            REMRQ2
00AD 36F3                              MVI L,REMRQ AND 0FFH

00AF C7                MOV     A,M
00B0 3E00              MVI     M,0
00B2 0A                RRC
00B3 402800            JNC     LOOP
00B6 449A07            JMP     ERASE
                                       ENDIF
                ;
00B9 4B         CKCI:  IN      5       ;GET TAPE STATUS
00BA 2420              ANI     20H
00BC 48CD00            JNZ     RESET   ;IF CART OUT GO RESET
                       LAD     STPSW
00BF 36FB                              MVI L,STPSW AND 0FFH

00C1 49                IN      4
00C2 BF                CMP     M       ;SEE IF SEL PANEL SW HAVE CHANGE
00C3 685700            JZ      LOOP3   ;NOPE
00C6 F8                MOV     M,A
00C7 460203            CALL    RDSSW   ;GET NEW STOP CODE
00CA 445700            JMP     LOOP3
                ;
00CD            RESET  EQU     $
00CD A8                XRA     A
                                       IF F101
                       LAD     CPRLE   ;RESET SEARCH BUFFER
00CE 36E0                              MVI L,CPRLE AND 0FFH

00D0 F8                MOV     M,A
                                       ENDIF
                       LAD     IND4    ;RESET EOT/BOT
00D1 36D5                              MVI L,IND4 AND 0FFH

00D3 F8                MOV     M,A
00D4 5B                OUT     0DH
                                       IF F102
00D5 30                INR     L       ;RESET EDIT FLAG
00D6 F8                MOV     M,A
                                       ENDIF
                       LAD     CURBUF  ;RESET BUFFER
00D7 36D0                              MVI L,CURBU AND 0FFH

00D9 C7                MOV     A,M
00DA 80                ADD     A
00DB 02                RLC
00DC 5D                OUT     0EH     ;SET ALARM IF BUFFER NOT CLEAN
00DD A8         STOPSW: XRA    A
00DE F8                MOV     M,A
                                       IF F107
                       LAD     RXFLG
                       MOV     M,A
                                       ENDIF
00DF 1D                RST     ABORT SHR 3
                ;
                ;
                ;
                ;
```

```
                        ;                       TAPEIO ROUTINE
                        ;
                        ;
00E0 06CC       VERBAK: MVI     A,0CCH  ;READ REV VER COMMAND
00E2 C8         TAPEI:  MOV     B,A     ;SAVE COMMAND
00E3 4B                 IN      5       ;GET TAPE STATUS
00E4 80                 ADD     A       ;IS DRIVE BUSY?
00E5 70000B             JM      MEMDMP  ;IF SO BAD ERROR * * * * * *
00E8 C1                 MOV     A,B     ;GET COMMAND
00E9 53                 OUT     09H     ;START TAPE
00EA 2E1336DA           LXI     H,SAVREG;SAVE REGS AND WAIT FOR TAPEND
00EE F9                 MOV     M,B
00EF 30                 INR     L
00F0 FA                 MOV     M,C
00F1 30                 INR     L
00F2 FB                 MOV     M,D
00F3 30                 INR     L
00F4 FC                 MOV     M,E
                        LAD     SAVSRQ+1
00F5 36F2                       MVI L,013F2H AND OFFH

                        ANM     OFBH    ;TURN OFF DRIVE READY BIT
00F7 C7                 MOV     A,M
00F8 24FB               ANI     000FBH
00FA F8                 MOV     M,A

00FB 442C00             JMP     LOOP+4
                        ;
                        ;
00FE C7         TAPEN:  MOV     A,M
00FF 24FB               ANI     OFBH    ;RESET SRQ
0101 F8                 MOV     M,A
                        LAD     SAVREG  ;RESTORE REGS
0102 36DA                       MVI L,SAVRE AND OFFH

0104 CF                 MOV     B,M
0105 30                 INR     L
0106 D7                 MOV     C,M
0107 30                 INR     L
0108 DF                 MOV     D,M
0109 30                 INR     L
010A E7                 MOV     E,M
010B 4B                 IN      5       ;GET TAPE STATUS
010C 24FE               ANI     OFEH    ;TEST FOR ABEND
010E 07                 RET             ;RETURN TO TAPEI/O CALL
                        ;
                        ;
                        ;
010F 2E1336D1   CLEAN:  LXI     H,BUFFPT ;CLEAN UP BUFFER IF MODIFIED
0113 3E00               MVI     M,0     ;RESET BUFFER POINTER
0115 31                 DCR     L       ;GET CURBUF
                        ANM     41H     ;MARK BUFFER EMPTY
0116 C7                 MOV     A,M
0117 2441               ANI     00041H
0119 F8                 MOV     M,A

011A 3C02               CPI     2       ;WAS BUFFER MODIFIED?
011C 23                 RC              ;IF NOT, EXIT
                                IF F102
                        LAD     EDIFLG  ;WAS IT MODIFIED BY EDIT
011D 36D6                       MVI L,EDIFL AND OFFH

011F C7                 MOV     A,M
0120 0A                 RRC
0121 403601             JNC     POSOK
0124 46E000     EDIPOS: CALL    VERBAK  ;POS INFRONT OF PREV BLOCK
```

```
                        LAD     POSIT
0127 36D9                       MVI L,POSIT AND OFFH

0129 D7                 MOV     C,M
012A 11                 DCR     C
012B FA                 MOV     M,C
012C 502401             JP      EDIPOS  ;MORE?
012F 3E00               MVI     M,0
0131 068C               MVI     A,8CH
0133 46E200             CALL    TAPEIO  ;NOW GET A RUN AT IT
             POSOK:     LAD     CURBUF
0136 36D0                       MVI L,CURBU AND OFFH

0138 C7                 MOV     A,M
                                ENDIF
0139 2401    WRTBU:     ANI     1       ;GET BUFFER ADDR
013B D0                 MOV     C,A     ;SAVE OLD BUFFER IN C
013C 2C01               XRI     1       ;SWITCH BUFFERS
013E F8                 MOV     M,A     ;PUT NEW BUFFER IN CURBUF
013F 2E1336D9 CKPOS:    LXI     H,POSIT
0143 CF                 MOV     B,M
0144 09                 DCR     B
0145 509601             JP      REPO
0148 C2                 MOV     A,C
0149 3484    WRTTA:     ORI     84H     ;WRITE COMMAND
014B 46E200             CALL    TAPEIO  ;ISSUE IT
014E 4A9D01             CNZ     TAPERR  ;IF ABEND GO PROCESS ERROR
0151 46E000             CALL    VERBAK  ;NOW VERIFY IT
0154 2418               ANI     18H     ;DATA ERROR?
0156 487F01             JNZ     WRTERR  ;IF ABEND  BRANCH
0159 463F02             CALL    GETBUF
015C 2C01               XRI     1
015E 3482               ORI     82H     ;AND ZERO BUFFER
0160 46E200             CALL    TAPEIO
                        LAD     HOLDFL  ;IS ANOTHER BUFFER WAITING?
0163 36FC                       MVI L,HOLDF AND OFFH

0165 B7                 ORA     M
0166 3E00               MVI     M,0
0168 707A01             JM      WTRET   ;IF SO DONT TURN OFF IND
                        LAD     IND3
016B 36D4                       MVI L,IND3 AND OFFH

                        ANM     3       ;TURN OFF BUFFER FULL
016D C7                 MOV     A,M
016E 2403               ANI     00003H
0170 F8                 MOV     M,A

0171 59                 OUT     0CH
                                IF F102
0172 0A                 RRC
0173 607A01             JC      WTRET
                        LAD     EDIFLG
0176 36D6                       MVI L,EDIFL AND OFFH

0178 3E00               MVI     M,0
                                ENDIF
017A         WTRET      EQU     $
                                IF F109
                        LAD     IND4    ;CHECK FOR E.W.
                        MOV     A,M
                        ANI     2
                        JZ      WXIT    ;IF NOT, EXIT
                        CALL    INCTRK  ;STEP TO NEXT TRACK
                        JZ      WXIT    ;IF TRACK FOUR, EXIT
                        MOV     A,B
```

```
                        RLC
                        RLC
                        ANI     3
                        OUT     0FH     ;ERASE OLD TRACK TO E.O.T.
                ERSEOT: CALL    EBLK    ;ERASE
                        ANI     6
                        CPI     4
                        JNZ     ERSEOT
                        IN      4
                        RLC
                        RLC
                        ANI     3
                        ADI     1
                        OUT     0FH     ;NOW USE NEW TRACK
                        CALL    TSRWB   ;REWIND TO BOT
                        CALL    EBLK    ;ERASE TO L.P.
                        ANI     6
                        CPI     2
                        JNZ     $-7
                        CALL    EBLK
                        CALL    EBLK
                        CALL    RLSHLD  ;RELEASE HOLD
                WXIT    EQU     $
                        ENDIF
                        LAD     POSIT
017A 36D9                       MVI L,POSIT AND 0FFH

017C 3E01               MVI     M,1
017E 07                 RET             ;AND EXIT
                ;
                                IF F109
                EBLK:   MVI     A,90H   ;ERASE BLOCK FWD
                        JMP     TAPEIO
                                ENDIF
                ;
                ;
017F            WRTER   EQU     $
                                IF F102
                        LAD     EDIFLG
017F 36D6                       MVI L,EDIFL AND 0FFH

0181 C7                 MOV     A,M
0182 0A                 RRC
0183 608E01             JC      RETRY   ;IF EDIT MODE  SKIP ERASE
                                ENDIF
0186 0690               MVI     A,90H   ;GET ERASE COMMAND
0188 46E200             CALL    TAPEIO
018B 4A9D01             CNZ     TAPERR
018E 463F02     RETRY:  CALL    GETBUF
0191 2C01               XRI     1
0193 444901             JMP     WRTTAP  ;NOW RETRY WRITE
                ;
0196 F9         REPO:   MOV     M,B
0197 46E000             CALL    VERBAK  ;BACK UP 1 BLOCK
019A 443F01             JMP     CKPOS
                ;
                ;
                ;
019D 2406       TAPER:  ANI     6       ;TEST FOR EOT OR EW
019F 48FB01             JNZ     EOTEW   ;IF SO BRANCH
01A2 4B         TSTER:  IN      5       ;GET STATUS AGAIN
01A3 2418               ANI     18H
01A5 3C08               CPI     08H     ;TEST FOR DATA ERROR
01A7 48F901             JNZ     TPERET  ;IF NOT, EXIT
01AA 41                 IN      0
01AB 2408               ANI     08H     ;IS ERROR RESET SWITCH DOWN?
```

```
01AD 48F601            JNZ     BLKTP   ;IF SO SKIP ERROR
01B0 43                IN      1
01B1 2410              ANI     10H     ;IS FAST FWD SW DOWN?
01B3 48F901            JNZ     TPERET  ;IF SO ACCEPT ERROR
01B6 463202            CALL    TSTREV  ;ARE WE IN REVERSE?
                       LAD     CURBUF  ;GET BUFFER
01B9 36D0                      MVI L,CURBU AND OFFH

01BB C7                MOV     A,M
01BC 48D301            JNZ     SRVER   ;IF SEARCH REVERSE DO OPPOSIT
01BF 2401              ANI     1
01C1 34C8              ORI     0C8H    ;TRY READING BACKWARDS
01C3 46E200            CALL    TAPEIO
01C6 2418              ANI     18H
01C8 48E401            JNZ     TRYAGN  ;IF NO GOOD TRY FORWARD AGAIN
01CB 068C              MVI     A,8CH
01CD 46E200  ERROK:    CALL    TAPEIO  ;IT RECOVERED,SO REPOSITION HEAD
01D0 2416              ANI     16H     ;MASK ERROR BIT
01D2 07                RET
                ;
01D3 2401    SRVER:    ANI     1
01D5 3488              ORI     88H     ;TRY FORWARD
01D7 46E200            CALL    TAPEIO
01DA 2418              ANI     18H
01DC 48E401            JNZ     TRYAGN  ;IF NO GOOD TRY REV AGAIN
01DF 06CC              MVI     A,0CCH
01E1 44CD01            JMP     ERROK
                ;
01E4 0610    TRYAGN:   MVI     A,10H   ;PRETEND ITS BLANK TAPE
                       LAD     TERCNT
01E6 36F5                      MVI L,TERCN AND OFFH

01E8 CF                MOV     B,M
01E9 09                DCR     B       ;COUNT ERROR
01EA F9                MOV     M,B
01EB 0B                RNZ             ;EXIT IF NOT LIMIT
01EC 465602            CALL    STSTO
01EF 30                INR     L
                       ORM     5
01F0 C7                        MOV     A,M
01F1 3405                      ORI     00005H
01F3 F8                        MOV     M,A

01F4 57                OUT     0BH     ;TURN ON TAPE ERROR INDICATOR
01F5 5D                OUT     0EH     ;TURN ON BUZZER
01F6 0610    BLKTP:    MVI     A,10H   ;PRETENDITS BLANK TAPE
01F8 07                RET
                ;
01F9 4B      TPERE:    IN      5       ;GET STATUS AGAIN
01FA 07                RET
                ;
                               IF F109
                DECTRK:   IN     4       ;GET CURRENT TRACK
                          MOV    L,A     ;SAVE
                          RLC
                          RLC
                          ANI    3
                          SUI    1       ;DECR TRACK
                          JC     NXTT    ;IF TRACK ONE DONT SWITCH
                          OUT    0FH
                          IN     4
                          CMP    L       ;DID TRACK SWITCH?
                          JZ     NXTT    ;IF NOT WERE NOT IN AUTO!
                          CALL   STHLD   ;RESTRAIN THE OUTSIDE WORLD
                TSLP1:    CALL   TSTOP
                          MVI    A,0A0H  ;FAST FWD
```

```
                                CALL    TAPEIO
                                ANI     6
                                CPI     4
                                JNZ     TSLP1
                                CALL    VERBAK  ;NOW BACK UP TO EOT
                                ANI     6
                                JZ      $-5
                                CALL    RLSHLD
                                JMP     NXTT
                                ENDIF
                        ;
01FB 3C04               EOTEW:  CPI     4       ;WAS IT AN EOT
01FD 681802                     JZ      EOT
                                IF F109
                                JNC     DECTRK  ;IF BOT, GO SWITCH TRACKS
                        NXTT    EQU     $
                                ENDIF
                                IF NOT F109
0200 40ED04                     JNC     RWBOT
                                ENDIF
0203 463202                     CALL    TSTREV  ;ARE WE GOING REVERSE?
0206 06FD                       MVI     A,0FDH
0208 482802                     JNZ     RSTEOT+2
020B 0602                       MVI     A,2
                        SETIN:  LAD     IND4    ;SET EOT OR EW IND
020D 36D5                               MVI L,IND4 AND 0FFH

020F B7                         ORA     M
0210 F8                         MOV     M,A
0211 5B                         OUT     0DH
0212 0601                       MVI     A,1
0214 5D                         OUT     0EH     ;SET BUZZER
0215 44A201                     JMP     TSTERR  ;NOW TEST FOR DATA ERROR
                        ;
0218 463202             EOT:    CALL    TSTREV  ;ARE WE GOING REV?
021B 482602                     JNZ     RSTEOT  ;IF SO,  TURN OFF EOT
021E 465602                     CALL    STSTOP
0221 0604                       MVI     A,4
0223 440D02                     JMP     SETIND
                        ;
0226 06FB               RSTEO:  MVI     A,0FBH
                                LAD     IND4
0228 36D5                               MVI L,IND4 AND 0FFH

022A A7                         ANA     M
022B F8                         MOV     M,A
022C 5B                         OUT     0DH
022D A8                         XRA     A
022E 5D                         OUT     0EH
022F 44A201                     JMP     TSTERR
                        ;
                        TSTREV: LAD     IND1
0232 36D2                               MVI L,IND1 AND 0FFH

0234 C7                         MOV     A,M
0235 2411                       ANI     11H
0237 07                         RET
                        ;
                        ;
0238 464502             SETOV:  CALL    TSTBUF  ;MARK BUFR POINTER OVERFLOW
023B 3480                       ORI     80H
023D F8                         MOV     M,A
023E 07                         RET
                        ;
                        ;
                        GETBUF: LAD     CURBUF  ;GET BUFFER
```

```
023F 36D0                       MVI L,CURBU AND 0FFH

0241 C7             MOV         A,M
0242 2401           ANI         1
0244 07             RET
                    ;
                    ;
0245 2E1336D0 TSTBUF: LXI       H,CURBUF
0249 C7             MOV         A,M
024A 3C02           CPI         2           ;TEST FOR EMPTY BUFFER
024C 07             RET
                    ;
                    ;
024D 2E1336D2 TSTOP: LXI        H,IND1      ;TEST FOR STOP MODE
0251 C7             MOV         A,M
0252 2420           ANI         20H
0254 2B             RZ
0255 20             RST         LOOP SHR 3          ;IF SET ABANDON TASK
                    ;
                    ;
0256 2E1336F3 STSTO: LXI        H,REMRQ
025A A8             XRA         A
025B F8             MOV         M,A
                                IF F102
                    LAD         IND3        ;TURN OFF EDIT AND CHAR INS
025C 36D4                       MVI L,IND3 AND 0FFH

025E C7             MOV         A,M
025F 2403           ANI         3
0261 686702         JZ          $+6
0264 A8             XRA         A
0265 F8             MOV         M,A
0266 59             OUT         0CH
                                ENDIF
                                IF F104 OR F105
                    LAD         ESCFLG
0267 36D8                       MVI L,ESCFL AND 0FFH

0269 F8             MOV         M,A
                                ENDIF
                    LAD         IND1        ;NOW SET STOP MODE AND IND
026A 36D2                       MVI L,IND1 AND 0FFH

026C 3420           ORI         20H         ;SET STOP MODE AND COND CODE
026E 55             OUT         0AH
026F F8             MOV         M,A
                    RSTER: LAD      TERCNT  ;RESET TAPE ERROR CNT
0270 36F5                       MVI L,TERCN AND 0FFH

0272 3E14           MVI         M,20
0274 07             RET
                    ;
                    ;
0275 463F02   CLEAR: CALL       GETBUF
0278 3410           ORI         10H
027A 30             INR         L
027B F7             MOV         L,M
027C E8             MOV         H,A
027D A8             XRA         A
027E F8             MOV         M,A
027F 30             INR         L
0280 487E02         JNZ         $-2
0283 2E1336D1       LXI         H,BUFPTR
0287 F8             MOV         M,A
0288 07             RET
                    ;
```

```
                        ;
0289 4B         RECORD: IN      5           ;SET RECORD MODE
028A 2461               ANI     61H         ;OK TO RECORD
028C 481800             JNZ     ABORT       ;IF NOT ABORT
028F 0680               MVI     A,80H       ;IF OK SET THE MODE
0291 F8         STMOD:  MOV     M,A         ;SET MODE
0292 55                 OUT     0AH         ;AND INDICATOR
                        LAD     IND4
0293 36D5                       MVI L,IND4 AND OFFH

0295 2411               ANI     11H
0297 C7                 MOV     A,M
0298 48A502             JNZ     REVMOD
029B 2404               ANI     4           ;IS EOT ON?
029D 481800             JNZ     ABORT       ;YES , DONT SET MODE
02A0 4B         TSTTD:  IN      5           ;GET TAPE STATUS
02A1 2460               ANI     60H         ;IS DRIVE READY?
02A3 2B                 RZ
02A4 1D                 RST     ABORT SHR 3         ;IF NOT, ABORT
                        ;
02A5 0A         REVMO:  RRC                 ;IS BOT ON?
02A6 40A002             JNC     TSTTDS
02A9 1D                 RST     ABORT SHR 3
                        ;
                        ;
                POSZ:   LAD     POSIT
02AA 36D9                       MVI L,POSIT AND OFFH

02AC 3E00               MVI     M,0
                        LAD     CURBUF
02AE 36D0                       MVI L,CURBU AND OFFH

02B0 07                 RET
                        ;
                POS1:   LAD     POSIT
02B1 36D9                       MVI L,POSIT AND OFFH

02B3 3E01               MVI     M,1
02B5 07                 RET
                        ;
                        IF F109
                INCTRK: IN      4           ;GET CURRENT TRACK NUMBER
                        MOV     B,A         ;SAVE ,IT
                        RLC
                        RLC
                        ADI     1
                        ANI     3
                        RZ                  ;IF ON TRACK 4 DONT DO IT
                        OUT     0FH
                        IN      4
                        CMP     B           ;DID TRACK SWITCH?
                        RZ                  ;IF NOT, WERE NOT IN AUTO
                STHLD:  LAD     IND3        ;RESTRAIN OUTSIDE WORLD
                        MOV     A,M
                        ORI     8
                        OUT     0CH
                        RET
                        ;
                TSRWB:  CALL    TSTOP       ;REWIND TAPE FOR NEXT TRACK
                        MVI     A,0E0H      ;(FAST REV)
                        CALL    TAPEIO
                        ANI     6
                        CPI     6
                        JNZ     TSRWB
                        RET                 ;IF BOT, EXIT
                        ;
```

```
                    RLSHLD: LAD     IND3    ;RELEASE RESTRAINT
                            MOV     A,M
                            OUT     OCH
                            INR     L
                            XRA     A       ;RESET EW,EOT,BOT
                            MOV     M,A
                            OUT     OEH     ;RESET BUZZER
                            OUT     ODH
                            RET
                    ;
                            ENDIF
                    ;
                    ;
                    ;
                    ;       **READ TAPE FORWARD**
                    ;
                    ;
02B6 460F01         READF:  CALL    CLEAN   ;SET BUFFER EMPTY AND CLEAN
                            LAD     IND4    ;IS BOT SET?
02B9 36D5                   MVI L,IND4 AND OFFH

02BB C7                     MOV     A,M
02BC 0A                     RRC
02BD 0680                   MVI     A,80H   ;(FWD NOP)
02BF 62E200                 CC      TAPEIO  ;IF SO, MOVE TAPE FWD
02C2 46FA02                 CALL    RSTBOT
                                    IF F109
                            ANI     2       ;IS EW SET?
                            JZ      TT
                            CALL    INCTRK  ;IF SO SWITCH TRACKS
                            JZ      TT      ;IF TRACK 4 IGNORE
                            CALL    TSRWB   ;REWIND
                    TSFWD:  CALL    TSTOP
                            MVI     A,80H
                            CALL    TAPEIO
                            ANI     6
                            CPI     2
                            JNZ     TSFWD   ;LOOP IF NOT L.P.
                            MVI     A,80H
                            CALL    TAPEIO
                            CALL    RLSHLD
                    TT      EQU     $
                            ENDIF
                            LAD     CURBUF  ;GET BUFFER
02C5 36D0                   MVI L,CURBU AND OFFH

02C7 C7                     MOV     A,M
02C8 3488                   ORI     88H     ;READ COMMAND
02CA 46E200                 CALL    TAPEIO
02CD 48EC02                 JNZ     RFABND  ;ABEND
                    RDFWD:  LAD     CURBUF
02D0 36D0                   MVI L,CURBU AND OFFH

                            ORM     10H ;SET BUFFER NOT EMPTY
02D2 C7                             MOV     A,M
02D3 3410                           ORI     00010H
02D5 F8                             MOV     M,A

02D6 30                     INR     L
02D7 3E00                   MVI     M,0     ;RESET BUFPTR
                            LAD     POSIT
02D9 36D9                   MVI L,POSIT AND OFFH

02DB C7                     MOV     A,M
02DC B0                     ORA     A
02DD 3E01                   MVI     M,1
```

```
02DF 68B602             JZ      READFW
02E2 467002             CALL    RSTERR
02E5 464D02             CALL    TSTOP
                        LAD     CURBUF
02E8 36D0                       MVI L,CURBU AND 0FFH

02EA C7                 MOV     A,M
02EB 07                 RET
                ;
02EC 469D01     RFABN:  CALL    TAPERR  ;GO TEST FOR ERRORS OR EW OR EOT
02EF 2410               ANI     10H     ;TEST FOR BLANK TAPE
02F1 68D002             JZ      RDFWOK  ;IF NOT READ WAS OK
02F4 464D02             CALL    TSTOP
02F7 44B602             JMP     READFW  ;IF NO STOP, TRY AGAIN
                ;
                RSTBO:  LAD     IND4    ;TURN OFF BOT IND
02FA 36D5                       MVI L,IND4 AND 0FFH

                        ANM     6
02FC C7                 MOV     A,M
02FD 2406               ANI     00006H
02FF F8                 MOV     M,A

0300 5B                 OUT     0DH
0301 07                 RET
                ;
                ;
0302            RDSSW   EQU     $
0302 2E03               MVI     H,STCHT SHR 8   ;SET UP STOP CODE
0304 49                 IN      4       ;GET STATIC SW
0305 2407               ANI     7
0307 0411               ADI     STCHT AND 0FFH  ;INDEX INTO TABLE
0309 F0                 MOV     L,A
030A C7                 MOV     A,M
030B 2E1336DE           LXI     H,STPCHR
030F F8                 MOV     M,A
0310 07                 RET
                ;
0311 80         STCHT:  DB      80H     ;OFF
0312 00                 DB      0       ;CHAR
0313 20                 DB      20H     ;WORD
0314 0A                 DB      0AH     ;LINE
0315 03                 DB      03H     ;ETX
0316 13                 DB      13H     ;DC3
0317 0D                 DB      0DH     ;CR
                ;
                ;
                ;
                        ;SERVICE RECIEVE DATA BUFFER
                ;
0318 CF         RECFL:  MOV     B,M     ;RESET SAVSRQ
0319 09                 DCR     B
031A F9                 MOV     M,B
031B 30                 INR     L       ;RESET SAVSRQ+1
031C CF                 MOV     B,M
031D 09                 DCR     B
031E F9                 MOV     M,B
                        LAD     HOLDFL  ;ARE BOTH BUFFERS FULL?
031F 36FC                       MVI L,HOLDF AND 0FFH

0321 A8                 XRA     A
0322 B7                 ORA     M
0323 709F03             JM      CKTP    ;IF SO WAIT
0326 47                 IN      3       ;GET UART STATUS
0327 2414               ANI     14H     ;TEST FOR ERROR
0329 48EF03             JNZ     RECERR  ;IF SO GOTO ERROR ROUTINE
```

```
032C 45                     IN      2       ;GET THE CHARACTER
                                    IF F108
                            MOV     E,A     ;SAVE ENTIRE 8 BITS
                                    ENDIF
032D 247F                   ANI     7FH     ;STRIP PARITY BIT
032F D0                     MOV     C,A     ;SAVE CHAR IN C REG
                                    IF F104 OR F105
0330 49                     IN      4
0331 2410                   ANI     10H     ;TEST FOR REMOTE CONTROL
0333 48A306                 JNZ     TSTCHR  ;IF SO GO TEST FOR ESC
                                    ENDIF
0336 2E1336D4 REGCH:        LXI     H,IND3
                                    IF F102
033A DF                     MOV     D,M     ;REMEMBER EDIT MODE
                                    ENDIF
                                    IF F103 OR F101
033B C7                     MOV     A,M
033C 2402                   ANI     2       ;CHAR INS MODE?
033E 487B06                 JNZ     INSCHR  ;IF SO BRANCH
                                    ENDIF
                                    IF NOT F103 OR NOT F101
                            XRA     A
                                    ENDIF
                            LAD     IND1
0341 36D2                           MVI L,IND1 AND 0FFH

0343 B7                     ORA     M
0344 502800                 JP      LOOP    ;IF NOT RECORD MODE  EXIT
                                    IF F100
0347 0618                   MVI     A,CAN
0349 BA                     CMP     C       ;WAS THIS A CANCEL CHARACTER?
034A 68B003                 JZ      DELETE
                                    ENDIF
                                    IF F107
                            IN      4
                            ANI     10H
                            JNZ     TSTX    ;IF REMOTE CONTROL
                                    ENDIF
034D 464502     INSRT:      CALL    TSTBUF
0350 62AA02                 CC      POSZ    ;IF SO FORCE POSITION ZERO
                            ORM     50H     ;SET BUFFER MODIFIED AND NOT EMP
0353 C7                             MOV     A,M
0354 3450                           ORI     00050H
0356 F8                             MOV     M,A

0357 70D703                 JM      FULBUF  ;IF FULL, BRANCH
035A 30                     INR     L       ;NOW GET BUFPTR
035B F7                     MOV     L,M
035C E8                     MOV     H,A
                                    IF NOT F108
035D FA                     MOV     M,C     ;PUT CHARACTER AWAY
                                    ENDIF
                                    IF F108
                            MOV     M,E
                                    ENDIF
035E 30                     INR     L       ;STEP POINTER
                                    IF F102
035F 686703                 JZ      SAVBP
0362 C3                     MOV     A,D
0363 0A                     RRC     ;EDIT MODE?
0364 62CF03                 CC      BFCHK   ;IF SO GO CHECK FOR NULLS
                                    ENDIF
0367 C6         SAVBP:      MOV     A,L     ;SAVE
0368 2E1336D1               LXI     H,BUFPTR
036C F8                     MOV     M,A
036D B0                     ORA     A
```

```
                                        IF F103
036E 688403                 JZ          BUFFUL  ;IF POINTER NOW ZERO ITS FULL
0371 C3                     MOV         A,D
0372 0A                     RRC
0373 602800                 JC          LOOP    ;IF EDIT MODE, DONT
0376 49                     IN          4       ;GET STATIC SW
0377 2420                   ANI         20H     ;TEST FOR SHORT BUFFER
0379 689F03                 JZ          CKTP    ;IF NOT EXIT
037C 06C7                   MVI         A,199   ;ELSE SEE IF WE HAVE MORE THAN 1
037E BF                     CMP         M
037F 409F03                 JNC         CKTP    ;IF NOT EXIT
0382 3E00                   MVI         M,0     ;RESET BUFPTR
                                        ENDIF
                                        IF NOT F103
                            JNZ         CKTP
                                        ENDIF
0384 463802         BUFFU:  CALL        SETOV   ;MARK BUFFER POINTER OVERFLOW
                            LAD         IND3
0387 36D4                               MVI L,IND3 AND OFFH

0389 C7                     MOV         A,M     ;IS WRITE IN PROGRESS?
038A 3C04                   CPI         4
038C 68A703                 JZ          SETHOLD ;YES
038F 3404                   ORI         4       ;IF NOT SET BUFFER FULL
0391 F8                     MOV         M,A
0392 59                     OUT         0CH
                                        IF F102
0393 2C05                   XRI         5       ;EDIT MODE ONLY?
0395 482800                 JNZ         LOOP    ;NO
0398 460F01                 CALL        CLEAN
039B 465305                 CALL        EDIRD
                                        ENDIF
039E 2D                     RST         LOOP SHR 3      ;AND EXIT
                    ;
                    CKTP:   LAD         SAVSRQ
039F 36F1                               MVI L,SAVSR AND OFFH

03A1 C7                     MOV         A,M
03A2 0A                     RRC
03A3 0A                     RRC
03A4 443F00                 JMP         LOOP1
                    ;
                    ;
                    SETHOLD:            LAD     HOLDFL
03A7 36FC                               MVI L,HOLDF AND OFFH

                            ORM         80H
03A9 C7                                 MOV     A,M
03AA 3480                               ORI     00080H
03AC F8                                 MOV     M,A

03AD 442800                 JMP         LOOP
                    ;
                                        IF F100
                    DELETE: LAD         IND3
03B0 36D4                               MVI L,IND3 AND OFFH

03B2 C7                     MOV         A,M
                            LAD         CANFLG  ;SAVE MODE IN CANCEL FLG
03B3 36FD                               MVI L,CANFL AND OFFH

03B5 3E80                   MVI         M,80H
03B7 0A                     RRC
03B8 62CC03                 CC          XX
03BB 465602                 CALL        STSTOP
03BE 0E08                   MVI         B,BKSP
```

```
03C0 46F506                 CALL    XMT
                            LAD     REMRQ2
03C3 36F3                           MVI L,REMRQ AND OFFH

                            ORM     40H         ;SET SEARCH REV REQ.
03C5 C7                             MOV     A,M
03C6 3440                           ORI     00040H
03C8 F8                             MOV     M,A

03C9 442800                 JMP     LOOP
                    ;
03CC 3E02           XX:     MVI     M,2
03CE 07                     RET
                            ENDIF
                    ;
                    ;
                            IF F107
                    TSTX:   LAD     STXFL
                            ORA     M
                            JP      LOOP        ;IF STX HASN'T BEEN REC, EXIT
                            LAD     RLRCA
                            MOV     A,M
                            XRA     C           ;ACCUM LRC
                            MOV     M,A
                            JMP     INSRT
                            ENDIF
                    ;
                    ;
                            IF F102
03CF A8             BFCHK:  XRA     A
03D0 B7             BFCH1:  ORA     M           ;IS NEXT CHAR A NULL
03D1 0B                     RNZ                 ;IF NOT, ITS OK
03D2 30                     INR     L           ;IF SO STEP BUFPTR
03D3 2B                     RZ
03D4 44D003                 JMP     BFCH1       ;AND TRY THE NEXT CHAR
                            ENDIF
                    ;
                    ;
03D7 2401           FULBU:  ANI     1           ;GET ADDRESS
03D9 C8                     MOV     B,A
03DA 2C01                   XRI     1
03DC 3450                   ORI     50H
03DE F8                     MOV     M,A
03DF 30                     INR     L
03E0 3E01                   MVI     M,1
03E2 E8                     MOV     H,A
03E3 3600                   MVI     L,0
                            IF NOT F108
03E5 FA                     MOV     M,C         ;SAVE CHAR IN NEW BUFFFER
                            ENDIF
                            IF F108
                            MOV     M,E
                            ENDIF
03E6 D1                     MOV     C,B
03E7 463F01                 CALL    CKPOS       ;DO THE WRITE
03EA 3E00                   MVI     M,0
                            IF  F107
                            LAD     RXFLG
                            MOV     A,M
                            CPI     83H
                            JZ      RXRV        ;IF RXFLG ON GO SEARCH REVERSE
                            ENDIF
03EC 442800                 JMP     LOOP
                    ;
                    ;
03EF D0             RECER:  MOV     C,A         ;SAVE STATUS
```

```
03F0 45                     IN      2       ;CLEAR DATA AND RESET FLAG
                            LAD     IND2
03F1 36D3                           MVI L,IND2 AND OFFH

                            ORM     6       ;TURN ON INPUT ERROR
03F3 C7                             MOV     A,M
03F4 3406                           ORI     00006H
03F6 F8                             MOV     M,A

03F7 57                     OUT     0BH
03F8 0A                     RRC
03F9 5D                     OUT     0EH     ;BUZZER
                                    IF F107
                            LAD     RLRCA   ;FORCE LRC ERR
                            ORM     80H
                                    ENDIF
03FA C2                     MOV     A,C     ;GET STATUS
03FB 3C04                   CPI     4       ;WAS IT PARITY ERROR?
03FD 482800                 JNZ     LOOP    ;IF NOT EXIT
0400 163F                   MVI     C,3FH   ;IF SO LOAD`QUESTION MARK
0402 443603                 JMP     REGCHR
                ;
                ;
                ;
                ;
                ;
                XMTFL:      ANM     0FDH    ;TURN OFF BIT IN SRQ
0405 C7                             MOV     A,M
0406 24FD                           ANI     000FDH
0408 F8                             MOV     M,A

                            LAD     IND1
0409 36D2                           MVI L,IND1 AND OFFH

040B C7                     MOV     A,M
040C 80                     ADD     A       ;ARE WE IN XMIT MODE
040D 502800                 JP      LOOP    ;IF NOT EXIT
0410 4B                     IN      5       ;IS DRIVE READY?
0411 80                     ADD     A
0412 702800                 JM      LOOP    ;IF NOT EXIT
                                    IF F106
                            LAD     XMTDLY
                            MOV     B,M
                            DCR     B
                            JNZ     PAUSE
                                    ENDIF
                                    IF F107
                            LAD     RXFLG   ;REMEMBER RXFLG IN E
                            MOV     E,M
                            MVI     M,0     ;RESET RXFG
                                    ENDIF
0415 464502     XMITO:      CALL    TSTBUF  ;IF SO GET CURRENT BUFFER
0418 605D04                 JC      BUFEMT
041B 705D04                 JM      BUFEMT
041E 30                     INR     L
041F F7                     MOV     L,M     ;GET BUFFPTR
0420 E8                     MOV     H,A
0421 A8                     XRA     A
0422 B7         GETCH:      ORA     M       ;GET THE NEXT CHARACTER
                                    IF NOT F108
0423 685904                 JZ      NULCHR  ;IF NULL DONT XMIT IT
                                    ENDIF
0426 D0                     MOV     C,A     ;SAV CHAR IN C REG
                                    IF F107
                            CPI     02H     ;IS IT AN STX?
                            JZ      IGNOR
                            XRA     A
```

```
                        XRA     A
                        ORA     E
                        JM      IGNOR;WAS REXMT FLAG ON?
                        MOV     A,C
                                ENDIF
                                IF NOT F108
0427 3480               ORI     80H     ;OR IN MARK PARITY BIT
                                ENDIF
0429 51                 OUT     8       ;IF NOT LOAD UART XMIT REG
                                IF F108
                        ANI     7FH
                        MOV     C,A
                                ENDIF
042A 30                 INR     L       ;STEP BUFFER POINTER
042B C6                 MOV     A,L
042C 2E1336D1           LXI     H,BUFPTR        ;SAVE POINTER
0430 F8                 MOV     M,A
0431 6A3802             CZ      SETOV   ;IF PTR ZERO IT OVERFLOWED
                                IF F107
                        LAD     XLRCA
                        MOV     A,M
                        XRA     C       ;ACCUMULATE LRC
                        MOV     M,A
                                ENDIF
                        LAD     STPCHR
0434 36DE                       MVI L,STPCH AND OFFH

0436 C7                 MOV     A,M
0437 B0                 ORA     A       ;GET STOP CODE
0438 704204             JM      CKLF
043B 684904             JZ      MATCH
043E BA                 CMP     C
043F 684904             JZ      MATCH
                CKLF:   LAD     SAVSRQ+1
0442 36F2                       MVI L,013F2H AND OFFH .

                        ANM     0FDH    ;LET LOOP SEE XMT FLG AGAIN
0444 C7                 MOV     A,M
0445 24FD               ANI     000FDH
0447 F8                 MOV     M,A

                                IF      F106
                        MVI     A,0AH   ;TEST FOR LINE FEED
                        CMP     C
                        JNZ     LOOP    ;IF NOT EXIT
                        LAD     XMTDLY
                        MVI     M,167   ;SET 300 MS DELAY
                                ENDIF
0448 2D                 RST     LOOP SHR 3
                ;
0449            MATCH   EQU     $
                                IF F107
                        LAD     XLRCA
                        MOV     B,M
                        CALL    XMT     ;XMIT LRC
                                ENDIF
0449 464D04             CALL    STMTCH  ;SET MATCH AND STOP IND
044C 2D                 RST     LOOP SHR 3
                ;
                ;
044D 465602     STMTCH: CALL    STSTOP
0450 3404               ORI     4
                        LAD     IND1
0452 36D2                       MVI L,IND1 AND OFFH

0454 F8                 MOV     M,A     ;SET MATCH AND STOP IND
```

```
0455 55                 OUT     0AH
0456 0A                 RRC
0457 5D                 OUT     0EH     ;BEEP THE BEEPER
0458 07                 RET
                ;
                ;
                        IF F106
                PAUSE:  MOV     M,B
                        LXI     H,SAVSR+1
                        ANM     0FDH    ;LET LOOP SEE XMT FLG AGAIN
                        JMP     CKTP
                        ENDIF
                ;
                        IF F107
                IGNOR:  XRA     A
                        MOV     E,A
                        ENDIF
0459 30         NULCH:  INR     L       ;STEP BUFPTR
045A 482204             JNZ     GETCHR  ;IF NOT END TRY NEXT CHAR
045D 46B602     BUFEM:  CALL    READFW
0460 441504             JMP     XMITOK
                ;
                ;
                ;
                ;
                RSETS:  LAD     SAVSRQ
0463 36F1               MVI L,SAVSR AND 0FFH

                        ANM     0F7H    ;ERROR RESET SWITCH
0465 C7                 MOV     A,M
0466 24F7               ANI     000F7H
0468 F8                 MOV     M,A

                        LAD     IND2    ;RESET ERROR IND
0469 36D3               MVI L,IND2 AND 0FFH

046B A8                 XRA     A
046C F8                 MOV     M,A
046D 57                 OUT     0BH
046E 5D                 OUT     0EH
046F 442800             JMP     LOOP
                ;
                ;
                ;
0472 41         XMITS:  IN      0       ;CHECK FOR BOOTLOAD
0473 241C               ANI     1CH
0475 2C1C               XRI     1CH
0477 688C04             JZ      BOOT
047A 0640               MVI     A,40H   ;SET XMIT MODE
047C 469102             CALL    STMODE
                        LAD     SAVSRQ+1
047F 36F2               MVI L,013F2H AND 0FFH

                        ANM     0FDH
0481 C7                 MOV     A,M
0482 24FD               ANI     000FDH
0484 F8                 MOV     M,A

                        IF F107
                        MVI     B,82H   ;SEND STX
                        CALL    XMT
                        LAD     XLRCA
                        MVI     M,0     ;CLEAR LRC ACCUM
                        ENDIF
0485 464502             CALL    TSTBUF
0488 62B102             CC      POS1    ;FORCE POSITION 1
```

```
048B 2D                 RST     LOOP SHR 3
                        ;
048C F8         BOOT:   MOV     M,A
048D 46B102             CALL    POS1        ;ASSUME EMPTY BUFFER
0490 46B602             CALL    READFW      ;READ TAPE INTO BUF 0
0493 2E103600           LXI     H,BUF0
0497 C7                 MOV     A,M         ;GET FIRST CHAR OF BUFFER
0498 2C3A               XRI     3AH         ;IS IT A LOAD TAPE?
049A 48000B             JNZ     MEMDMP      ;IF NOT RESTART TCT
049D E0                 MOV     E,A         ;RESET DEST POINTER
049E 1E08               MVI     D,8         ;INIT SOURCE POINTER
04A0 1610       BOOT1:  MVI     C,16        ;INIT COUNTER
04A2 46C104     BOOT2:  CALL    BOOT3       ;GET MSD
04A5 02                 RLC
04A6 02                 RLC
04A7 02                 RLC
04A8 02                 RLC
04A9 C8                 MOV     B,A
04AA 46C104             CALL    BOOT3       ;GET LSD
04AD B1                 ORA     B           ;OR TOGETHER
04AE 2E11               MVI     H,BUF1 SHR 8
04B0 F4                 MOV     L,E         ;SAVE IN DEST.
04B1 F8                 MOV     M,A
04B2 20                 INR     E           ;STEP POINTER
04B3 6A0011             CZ      BUF1        ;TRANSFER CONTROL TO LOADER
04B6 11                 DCR     C           ;STEP COUNT
04B7 48A204             JNZ     BOOT2       ;LOOP
04BA C3                 MOV     A,D         ;SKIP OVHD CHARS
04BB 040D               ADI     13
04BD D8                 MOV     D,A
04BE 44A004             JMP     BOOT1       ;DO NEXT 16 BYTES
                        ;
04C1 18         BOOT3:  INR     D           ;INCR SOURCE POINTER
04C2 6A0011             CZ      BUF1        ;TRANSFER CONTROL TO LOADED PROG
04C5 F3                 MOV     L,D
04C6 2E10               MVI     H,BUF0 SHR 8
04C8 C7                 MOV     A,M         ;GET NEXT CHAR
04C9 1440               SUI     40H         ;CONVERT TO HEX DIGIT
04CB 40D004             JNC     $+5
04CE 0407               ADI     7
04D0 0409               ADI     9
04D2 07                 RET
                        ;
                        ;
                        ;
                        ;
                        ;
04D3 0610       REWIN:  MVI     A,10H       ;SET REWIND MODE
04D5 461D05             CALL    FFRWC       ;CLEAN THINGS UP
04D8 464D02     RWL00:  CALL    TSTOP       ;SEE IF STOP HAS BEEN PUSHED
04DB 06E0               MVI     A,0E0H      ;GET FAST REV COMMAND
04DD 46E200             CALL    TAPEIO      ;ISSUE REWIND
04E0 2406               ANI     6
04E2 68D804             JZ      RWL00
04E5 3C04               CPI     4           ;TEST FOR EOT
04E7 681305             JZ      RWEOT
04EA 600E05             JC      RWEW
04ED 5D         RWBOT:  OUT     0EH         ;RING BUZZER
04EE 1619               MVI     C,25
04F0 464D02     RWFWD:  CALL    TSTOP       ;HAS STOP BEEN PUSHED?
04F3 0680               MVI     A,80H       ;NOW MOVE FWD SLOW
04F5 46E200             CALL    TAPEIO
04F8 2406               ANI     6           ;TEST FOR LP
04FA 5D                 OUT     0EH         ;RING BUZZER
04FB 11                 DCR     C
04FC 68D804             JZ      RWL00       ;AFTER A WHILE TRY AGAIN
```

```
04FF 3C02                CPI     2
0501 48F004              JNZ     RWFWD   ;IF NOT MOVE FWD SOME MORE
                         LAD     IND4
0504 36D5                        MVI L,IND4 AND OFFH

0506 0A                  RRC             ;SET BOT MODE
0507 5B                  OUT     0DH
0508 F8                  MOV     M,A
                                 IF F100
                         LAD     CANFLG
0509 36FD                        MVI L,CANFL AND OFFH

050B 3E00                MVI     M,0
                                 ENDIF
                                 IF F109
                         XRA     A
                         OUT     0FH
                                 ENDIF
050D 1D                  RST     ABORT SHR 3
                    ;
050E 06FD        RWEW:   MVI     A,0FDH
0510 441505              JMP     RWEOT+2
                    ;
0513 06FB        RWEOT:  MVI     A,0FBH
                         LAD     IND4
0515 36D5                        MVI L,IND4 AND OFFH

0517 A7                  ANA     M
0518 F8                  MOV     M,A
0519 5B                  OUT     0DH     ;TURN OFF INDICATOR
051A 44D804              JMP     RWLOOP
                    ;
051D 469102      FFRWC:  CALL    STMODE
0520 46FA02              CALL    RSTBOT
0523 460F01              CALL    CLEAN
0526 447502              JMP     CLEAR
                    ;
                    ;
                    ;
0529 0608        FFWDS:  MVI     A,08H   ;SET FAST FWD MODE
052B 461D05              CALL    FFRWC   ;CLEAN THINGS UP
052E 464D02      FFLOO:  CALL    TSTOP   ;HAS STOP BEEN SET
0531 06A0                MVI     A,0A0H  ;GET FAST FWD COMMAND
0533 46E200              CALL    TAPEIO
0536 2406                ANI     6       ;TEST FOR EOT
0538 3C04                CPI     4
053A 482E05              JNZ     FFLOOP  ;IF NOT EOT   MOVE TAPE AGAIN
                         LAD     IND4    ;ELSE SET EOT IND
053D 36D5                        MVI L,IND4 AND OFFH

053F F8                  MOV     M,A
0540 5B                  OUT     0DH
                                 IF F109
                         MVI     A,3
                         OUT     0FH     ;SET TO TRACK 4
                                 ENDIF
0541 1D                  RST     ABORT SHR 3     ;SET BUZZER AND STOP
                    ;
                                 IF F102
0542 468902      EDITS:  CALL    RECORD  ;SET RECORD MODE
                         LAD     IND3
0545 36D4                        MVI L,IND3 AND OFFH

                         ORM     1       ;SET EDIT MODE
0547 C7                  MOV     A,M
0548 3401                ORI     00001H
```

```
054A F8                         MOV     M,A

054B 59                         OUT     0CH
                                LAD     EDIFLG  ;SET EDIT FLAG
054C 36D6                               MVI L,EDIFL AND 0FFH

054E F8                         MOV     M,A
054F 465305                     CALL    EDIRD
0552 2D                         RST     LOOP SHR 3
                ;
0553 464502     EDIRD:  CALL    TSTBUF  ;IS BUFFER EMPTY?
0556 62B102             CC      POS1    ;IF SO FORCE POSIT 1
0559 62B602             CC      READFW  ;AND GET A BLOCK
055C 30         EDLP:   INR     L
055D F7                 MOV     L,M
055E E8                 MOV     H,A
055F 46CF03             CALL    BFCHK   ;MOVE BUFPTR TO NON NUL CHAR
0562 0B                 RNZ
0563 46B602             CALL    READFW
0566 445C05             JMP     EDLP
                ;
                                ENDIF
                                IF F101
                ;
                INITO:  LAD     CPRLEN  ;IS CPR REG EMPTY?
0569 36E0                       MVI L,CPRLE AND 0FFH

056B C7                 MOV     A,M
056C B0                 ORA     A
056D 2B                 RZ              ;IF SO EXIT
056E 31                 DCR     L
056F 3E00               MVI     M,0     ;RESET CPRCNT
0571 444502             JMP     TSTBUF
                                ENDIF
                                IF F100
                ;
0574 460203     INIT1:  CALL    RDSSW   ;GET STOP CODE
0577 D0                 MOV     C,A     ;SAVE STOP CHAR
0578 444502             JMP     TSTBUF
                ;
057B 469102     INIT2:  CALL    STMODE
057E 444502             JMP     TSTBUF  ;GET THE BUFFER
                ;
                ;
                ;
                ;
                ;
0581 0602       SRCHF:  MVI     A,2     ;SEARCH FWD
0583 467B05             CALL    INIT2
0586 62B102             CC      POS1    ;IF BUFFER EMPTY FORCE POS 1
                                IF  F101
0589 466905             CALL    INITO
058C 48F907             JNZ     SSFWD   ;STRING SEARCH
                                ENDIF
058F 467405     SFGTB:  CALL    INIT1   ;STOP CODE SEARCH
0592 60B505             JC       SFRB
0595 70B505             JM       SFRB
0598 30                 INR     L
0599 F7                 MOV     L,M
059A E8                 MOV     H,A
059B A8                 XRA     A
059C B2                 ORA     C
059D 68AC05             JZ       CHR
05A0 C7         NXTCH:  MOV     A,M
05A1 BA                 CMP     C       ;IS THIS IT
05A2 68BB05             JZ       FOUND
```

```
05A5 30                    INR     L
05A6 48A005                JNZ     NXTCHR
05A9 44B505                JMP     SFRB
                    ;
05AC C7             CHR:   MOV     A,M
05AD B0                    ORA     A
05AE 48BB05                JNZ     FOUND
05B1 30                    INR     L
05B2 48AC05                JNZ     CHR
05B5 46B602         SFRB:  CALL    READFW
05B8 448F05                JMP      SFGTB
                           ENDIF
                    ;
                           IF F100 OR F107
05BB 30             FOUND: INR     L
05BC C6             FND:   MOV     A,L
05BD CF                    MOV     B,M      ;SAVE CHAR
05BE 2E1336D1              LXI     H,BUFPTR
05C2 F8                    MOV     M,A
05C3 6A3802                CZ       SETOV
05C6 464D04                CALL    STMTCH   ;TURN ON MATCH AND STOP IND
                           IF F100
                           LAD     CANFLG   ;WERE WE DELETING A CHAR?
05C9 36FD                  MVI L,CANFL AND OFFH

05CB C7                    MOV     A,M
05CC 3E00                  MVI     M,0
                           LAD     REMRQ2
05CE 36F3                  MVI L,REMRQ AND OFFH

05D0 B7                    ORA     M
05D1 F8                    MOV     M,A
05D2 4AF506                CNZ     XMT      ;IF SO XMT THE CHAR
05D5 0E08                  MVI     B,BKSP
05D7 4AF506                CNZ     XMT
                           ENDIF
                           IF F107
                           LAD     RXFLG
                           XRA     A
                           ORA     M        ;ARE WE IN REXMIT?
                           JP      LOOP
                           RRC
                           JC      RCR      ;IFWE WERE RECORDING GO SET MODE
                           MVI     M,80H
                           LAD     IND1
                           RRC
                           JC      SRCHR    ;SKIP OVER LAST GOOD STOP CODE
                           JMP     XMITS
                    ;
                    RCR:   LAD     IND1
                           CALL    RECORD
                           INR     L
                           XRA     A
                           OUT     0EH      ;RESET BUZZER
                           OUT     0BH      ;AND ERROR IND
                           MOV     M,A
                           LAD     RXFLG
                           MOV     M,A      ;RESET REXMIT FLAG
                           MVI     B,15H    ;SEND NAK
                    ACKNK: CALL    XMT
                           LAD     STPCH
                           MOV     C,M
                           JMP     INSRT    ;GO PROCESS STOP CODE
                           ENDIF
                           IF NOT F107
05DA 2D                    RST     LOOP SHR 3
                           ENDIF
```

```
                                        ENDIF
                                ;
                                ;
                                ;
                                ;       **** SEARCH REVERSE MODE ****
                                ;
05DB 0601       SRCHR:  MVI     A,1     ;SEARCH REVERSE
05DD 467B05             CALL    INIT2
05E0 62AA02             CC      POSZ    ;IF BUFFER EMPTY FORCE POS 0
                                        IF  F101
05E3 466905             CALL    INIT0
05E6 486A08             JNZ     SSREV
                                        ENDIF
05E9 467405     SRGTP:  CALL    INIT1
05EC 601206             JC      GTRBLK
05EF 30                 INR     L
05F0 F7                 MOV     L,M
05F1 E8                 MOV     H,A
05F2 0EFF               MVI     B,0FFH
05F4 31         NXT:    DCR     L
05F5 C1                 MOV     A,B
05F6 BE                 CMP     L
05F7 680E06             JZ      CKOVF
05FA A2         NXTOK:  ANA     C
05FB 680706             JZ      CHRFN
05FE C7                 MOV     A,M
05FF BA                 CMP     C
0600 48F405             JNZ     NXT
0603 B1         FNDR:   ORA     B
0604 44BC05             JMP     FND
                ;
0607 B7         CHRFN:  ORA     M
0608 68F405             JZ      NXT
060B 44BC05             JMP     FND
                ;
060E A5         CKOVF:  ANA     H
060F 701806             JM      RSETOV
0612 462806     GTRBL:  CALL    READRV
0615 44E905             JMP     SRGTPT
                ;
0618 462106     RSETO:  CALL    RSTOVF
061B E8                 MOV     H,A
061C F1                 MOV     L,B
061D C1                 MOV     A,B
061E 44FA05             JMP     NXTOK
                ;
                ;
0621 464502     RSTOV:  CALL    TSTBUF
0624 247F               ANI     7FH
0626 F8                 MOV     M,A
0627 07                 RET
                ;
0628 460F01     READR:  CALL    CLEAN
                        LAD     CURBUF
062B 36D0               MVI L,CURBU AND 0FFH

062D C7                 MOV     A,M     ;GET BUFFER
062E 34C8               ORI     0C8H    ;READ REVERSE
0630 46E200             CALL    TAPEIO
0633 485206             JNZ     RRABND
0636 464502     RDRVD:  CALL    TSTBUF
0639 3490               ORI     90H
063B F8                 MOV     M,A
063C 30                 INR     L
063D 3E00               MVI     M,0
                        LAD     POSIT
```

```
063F 36D9                       MVI L,POSIT AND 0FFH

0641 C7                 MOV     A,M
0642 3E00               MVI     M,0
0644 B0                 ORA     A
0645 482806             JNZ     READRV
0648 467002             CALL    RSTERR
064B 464D02             CALL    TSTOP
                        LAD     CURBUF
064E 36D0                       MVI L,CURBU AND 0FFH

0650 C7                 MOV     A,M
0651 07                 RET
                ;
0652 469D01     RRABN:  CALL    TAPERR
0655 2410               ANI     020Q
0657 683606             JZ      RDRVOK
065A 464D02             CALL    TSTOP
065D 442806             JMP     READRV
                        ENDIF
                ;
                ;
                        IF F103 OR F101
0660 3E00       CHRIN:  MVI     M,0
                        LAD     IND3    ;SET OR RESET CHRINS MODE
0662 36D4                       MVI L,IND3 AND 0FFH

0664 C7                 MOV     A,M
0665 2C02               XRI     2
0667 F8                 MOV     M,A
0668 59                 OUT     0CH     ;SET RESET THE IND
                        IF F101
0669 0A                 RRC
066A 602800             JC      LOOP    ;IF EDIT MODE EXIT
                        LAD     ESCFLG  ;ELSE DID WE TURN IT ON?
066D 36D8                       MVI L,ESCFL AND 0FFH

066F 0A                 RRC
0670 407806             JNC     RSLCPR  ;NO
0673 3E80               MVI     M,80H   ;SET UP TO LOAD COMPARE REG
0675 44BF07             JMP     LCPR
                ;
0678 3E00       RSLCP:  MVI     M,0     ;RESET IT
                        ENDIF
067A 2D                 RST     LOOP SHR 3
                ;
                ;
                ;
                ;
067B C7         INSCH:  MOV     A,M     ;INSERT CHARACTER IN BUFFER
067C 0A                 RRC
                        ENDIF
                        IF F101
067D 40CF07             JNC     LCRSEQ  ;IF NOT EDIT MODE LOAD CMPR REG
                        ENDIF
                        IF F103
0680 2402               ANI     2
0682 482800             JNZ     LOOP    ;IF BUFFER FULL IGNORE IT
                        LAD     BUFPTR
0685 36D1                       MVI L,BUFPT AND 0FFH

0687 CF                 MOV     B,M
0688 31                 DCR     L
0689 EF                 MOV     H,M
068A 36FF               MVI     L,0FFH  ;START AT TOP OF BUFFER
068C B7                 ORA     M       ;LOOK AT LAST CHAR
```

```
068D 489D06            JNZ     CIERR   ;IF NOT NUL BUF IS FULL
0690 C1                MOV     A,B     ;PUT BUFFTR IN A
0691 BE      CILOO:    CMP     L       ;IS THIS IT?
0692 684D03            JZ      INSRTC  ;IF SO STICK IT IN HERE
0695 31                DCR     L       ;IF NOT MOVE CHAR UP ONE NOTCH
0696 CF                MOV     B,M
0697 30                INR     L
0698 F9                MOV     M,B
0699 31                DCR     L
069A 449106            JMP     CILOOP  ;TRY AGAIN
                ;
069D 0601    CIERR:    MVI     A,1
069F 5D                OUT     0EH
06A0 448403            JMP     BUFFU
                ;
                                       ENDIF
                                       IF F101 AND NOT F103
                       RST             LOOP SHR 3
                                       ENDIF
                ;
                ;
                ;
                                       IF F104 OR F105
                TSTCH:  LAD            ESCFLG  ;*REMOTE CONTROL OPTION*
06A3 36D8                              MVI L,ESCFL AND OFFH
06A5 C7                MOV     A,M
06A6 B0                ORA     A
06A7 700507            JM      ESCSEQ  ;IF IN ESC SEQUENCE BRANCH
                                       IF F107
                       LAD             STXFL
                       MOV             A,M
                       RRC
                                       ENDIF
06AA C2                MOV     A,C     ;GET CHAR
                                       IF F107
                       JC              BCTST   ;TIME TO CHECK LRC
                       LAD             STPCH
                       CMP             M
                       JZ              EOM     ;THIS IS THE END OF MESSG
                                       ENDIF
06AB 3C1B              CPI     1BH     ;TEST FOR ESC CHAR
                                       IF F104
                       JZ              ESCCHR
                                       ENDIF
06AD 403603            JNC     REGCHR  ;IF HIGHR ITS REG CHAR
                                       IF F107
                       CPI             02H     ;IS IT AN STX
                       JZ              STX
                       CPI             06H     ;IS IT AN ACK?
                       JZ              DC1
                       CPI             15H     ;NAK?
                       JZ              REX
                                       ENDIF
                                       IF F105
06B0 3C10              CPI     10H     ;DLE?
06B2 68DB06            JZ      ESCCHR
                                       ENDIF
06B5 3C11              CPI     11H     ;DC1?
06B7 68E206            JZ      DC1
06BA 603603            JC      REGCHR  ;IF LOWER ITS REG CHAR
06BD 3C12              CPI     12H     ;DC2?
06BF 68E906            JZ      DC2
                       LAD             IND1
06C2 36D2                              MVI L,IND1 AND OFFH
```

```
06C4 3C14                CPI     14H       ;DC4?
06C6 68EE06              JZ      DC4
06C9 403603              JNC     REGCHR
06CC C7                  MOV     A,M
06CD 2440                ANI     40H       ;ARE WE IN XMIT?
06CF 683603              JZ      REGCHR    ;NO
06D2 0610                MVI     A,020Q    ;DC3 OR DC4 MEANS STOP
                 RCSR1:  LAD     SAVSRQ    ;PUT IT IN SRQ1
06D4 36F1                MVI L,SAVSR AND OFFH

06D6 B7          RCSR:   ORA     M
06D7 F8                  MOV     M,A
06D8 442800              JMP     LOOP
                 ;
06DB 0680        ESCCH:  MVI     A,80H     ;SET ESC SEQUENCE
                         LAD     ESCFL
06DD 36D8                MVI L,ESCFL AND OFFH

06DF 44D606              JMP     RCSR
                 ;
06E2 0604        DC1:    MVI     A,004Q    ;SET XMIT REQ
                 RCSR2:  LAD     REMRQ2
06E4 36F3                MVI L,REMRQ AND OFFH

06E6 44D606              JMP     RCSR
                 ;
06E9 0680        DC2:    MVI     A,80H     ;SET RECORD REQ
06EB 44E406              JMP     RCSR2
                 ;
06EE B7          DC4:    ORA     M         ;ARE WE IN RECORD?
06EF 503603              JP      REGCHR    ;NO
06F2 44D206              JMP     RCSR1-2
                 ;
                         IF F107
                 STX:    LAD     STXFL
                         ORA     M         ;HAS STX BEEN REC
                         JM      REGCH
                         MVI     M,80H     ;IF NOT TURN ON FLAG
                         LAD     RLRCA     ;RESET LRC ACCUM
                         MVI     M,0
                         JMP     LOOP
                 ;
                 EOM:    LAD     STXFL
                         ORA     M
                         JP      REGCH     ;IF NOT IN MESG EXIT
                         MVI     M,81H     ;ELSE, SET EOM RECVD
                         LAD     RLRCA
                         MOV     A,M
                         XRA     C         ;ACCUM LRC
                         MOV     M,A
                         JMP     LOOP
                 ;
                 BCTST:  LAD     RLRCA     ;TEST LRC CHAR
                         XRA     M
                         LAD     STXFL
                         MVI     M,0
                         JNZ     BCERR     ;IF NO GOOD ,BRANCH
                         MVI     B,06H
                         JMP     ACKNK     ;SEND ACK
                         ENDIF
                 ;
                         ENDIF
                         IF F100 OR F104 OR F105 OR F107
                 ;
                 XMT:    LAD     IND1
06F5 36D2                MVI L,IND1 AND OFFH
```

```
06F7 C7                 MOV     A,M
06F8 3440               ORI     40H
06FA 55                 OUT     0AH     ;TURN ON XMIT IND
06FB 47                 IN      3
06FC 0A                 RRC
06FD 40FB06             JNC     $-2     ;WAIT FOR C.T.S.
0700 C1                 MOV     A,B
0701 51                 OUT     8       ;SEND CHAR
0702 C7                 MOV     A,M
0703 55                 OUT     0AH     ;RESET XMIT IND
0704 07                 RET
                        ENDIF
                        IF F104 OR F105
                ;
                        IF F107
                ;
                BCERR:  LAD     IND1
                        MOV     A,M
                        ORA     A
                        JP      REGCH   ;IF NOT IN RECORD , EXIT
                        CALL    STSTOP
                        LAD     RXFLG
                        MVI     M,81H   ;REMEMBER RECORD MODE
                REX:    LAD     RXFLG   ;TURN ON REXMIT FLAG
                        ORM     82H
                        LAD     IND3    ;IS TAPE WRITE IN PROGRESS?
                        MOV     A,M
                        ANI     4
                        JNZ     LOOP    ;IF SO EXIT
                RXRV:   MVI     A,40H   ;TURN ON SEARCH REV
                        JMP     RCSR2
                        ENDIF
                ;
0705 3C81       ESCSE:  CPI     81H
0707 C2                 MOV     A,C
                        IF F101
0708 68CF07             JZ      LCRSEQ  ;BRANCH IF LOADING COMP REG
070B 3C4C               CPI     'L'     ;L LOAD CPR REG
070D 68BF07             JZ      LCPR
                        ENDIF
0710 3E00               MVI     M,0     ;RESET ESCFLG
                        IF F109
                        CPI     'T'
                        JZ      SETTRK
                        ENDIF
0712 461C07             CALL    ESCTST  ;TRY REMOTE CONT CHARS
0715 483603             JNZ     REGCHR  ;IF NOT MUST BE REG CHAR
0718 C1                 MOV     A,B     ;GET CONTROL BIT
0719 44D606             JMP     RCSR
                ;
                ESCTS:  LAD     REMRQ2
071C 36F3                       MVI L,REMRQ AND 0FFH

071E 3C43               CPI     'C'
0720 0E01               MVI     B,01H   ;ERASE
0722 2B                 RZ
0723 3C45               CPI     'E'
0725 0E02               MVI     B,02H   ;EDIT
0727 2B                 RZ
0728 3C58               CPI     'X'
072A 0E04               MVI     B,04H   ;XMIT
072C 2B                 RZ
072D 3C42               CPI     'B'
072F 0E08               MVI     B,08H   ;REWIND
0731 2B                 RZ
```

```
0732 3C46              CPI     'F'         ;F
0734 0E10              MVI     B,10H       ;FAST FWD
0736 2B                RZ
0737 3C3E              CPI     '>'
0739 0E20              MVI     B,20H       ;SRCH FWD
073B 2B                RZ
073C 3C3C              CPI     '<'
073E 0E40              MVI     B,40H       ;SRCH REV
0740 2B                RZ
0741 3C52              CPI     'R'         ;R
0743 0E80              MVI     B,80H       ;RECORD
0745 2B                RZ
                       LAD     SAVSRQ
0746 36F1                      MVI L,SAVSR AND OFFH

0748 3C57              CPI     'W'         ;W    WRITE BUFFER
074A 2B                RZ
074B 3C53              CPI     'S'         ;S
074D 0E10              MVI     B,10H       ;STOP
074F 2B                RZ
0750 3C49              CPI     'I'         ;I
0752 0E20              MVI     B,20H       ;CHR INSRT
0754 2B                RZ
0755 3C3F              CPI     '?'         ;?
0757 0E40              MVI     B,40H       ;REQ STATUS
0759 07                RET
                ;
075A 3E00      RQSTA:  MVI     M,0
075C 4B                IN      5           ;GET WLO BIT
075D 02                RLC
075E D0                MOV     C,A
075F 2402              ANI     2
0761 02                RLC
0762 02                RLC
0763 C8                MOV     B,A
                       LAD     IND1        ;GET SEARCH MATCH BIT
0764 36D2                      MVI L,IND1 AND OFFH

0766 C7                MOV     A,M
0767 2404              ANI     4
0769 B1                ORA     B
076A C8                MOV     B,A
076B 30                INR     L           ;GET INPUT & TAPE ERROR BIT
076C C7                MOV     A,M
076D 2403              ANI     3
076F B1                ORA     B
0770 02                RLC
0771 02                RLC
0772 C8                MOV     B,A
                       LAD     IND4        ;GET EOT BIT
0773 36D5                      MVI L,IND4 AND OFFH

0775 C7                MOV     A,M
0776 1A                RAR
0777 1A                RAR
0778 B7                ORA     M           ;GET BOT & EW BITS
0779 2403              ANI     3
077B B1                ORA     B
077C C8                MOV     B,A
077D 4B                IN      5           ;GET CART IN & READY BIT
077E B2                ORA     C
077F 2440              ANI     40H
0781 2C40              XRI     40H
0783 B1                ORA     B
0784 C8                MOV     B,A
0785 46F506            CALL    XMT         ;NOW XMIT THE STATUS
```

```
                                    IF F109
                        IN          4
                        RLC
                        RLC
                        ANI         3
                        ORI         30H
                        MOV         B,A
                        INR         B
                        CALL        XMT         ;SEND TRACK NUMBER
                                    ENDIF
0788 446304             JMP         RSETSW      ;NOW RESET ERRORS IF ANY
                ;
                ;
                                    IF F109
                SETTRK: IN          03
                        ANI         1EH
                        JZ          SETTRK      ;WAIT FOR NXT CHAR
                        IN          2
                        SUI         1
                        ANI         3
                        LAD         TRACK
                        MOV         M,A
                        CALL        CLEAN
                        LAD         TRACK
                        MOV         A,M
                        OUT         0FH         ;SET TO NEW TRACK
                        JMP         LOOP
                                    ENDIF
                ;
                ;
078B 3E00       WBUF:   MVI         M,0         ;WRITE BUFFER
078D 46B507             CALL        TSTRM       ;TEST FOR LEGAL COMMAND
0790 460F01             CALL        CLEAN
0793 467502             CALL        CLEAR
0796 46AA02             CALL        POSZ
0799 2D                 RST         LOOP SHR 3
                ;
                ;
079A 46B507     ERASE:  CALL        TSTRM       ;TEST FOR LEGAL COMMAND
079D 464502             CALL        TSTBUF
07A0 60AC07             JC          ERAS1
07A3 3440               ORI         40H
07A5 F8                 MOV         M,A
07A6 467502             CALL        CLEAR
07A9 460F01             CALL        CLEAN
07AC 0690       ERAS1:  MVI         A,90H       ;GET ERASE COMMAND
07AE 46E200             CALL        TAPEIO
07B1 4A9D01             CNZ         TAPERR
07B4 2D                 RST         LOOP SHR 3
                ;
                ;
                TSTRM:  LAD         IND1        ;GET RECORD MODE BIT
07B5 36D2                           MVI L,IND1 AND 0FFH

07B7 B7                 ORA         M
                                    IF F102
                        LAD         EDIFLG      ;GET EDIT FLAG
07B8 36D6                           MVI L,EDIFL AND 0FFH

07BA B7                 ORA         M
                                    ENDIF
07BB 2C80               XRI         80H         ;TEST FOR RECORD MODE ONLY
07BD 2B                 RZ                      ;RETURN IF OK
07BE 1D                 RST         ABORT SHR 3     ;IF NOT ABANDON COMMAND
                ;
                ;
```

```
                                        ENDIF
                        ;
                                        IF      F101
                        ;
07BF 0601       LCPR:   MVI     A,1     ;LOAD COMPARE REG MODE
07C1 B7                 ORA     M
07C2 F8                 MOV     M,A
                        LAD     CPRLEN
07C3 36E0                       MVI L,CPRLE AND 0FFH

07C5 3E00               MVI     M,0
                        LAD     IND3
07C7 36D4                       MVI L,IND3 AND 0FFH

                        ORM     2 ;TURN ON CHAR INSERT LIGHT
07C9 C7                         MOV     A,M
07CA 3402                       ORI     00002H
07CC F8                         MOV     M,A

07CD 59                 OUT     0CH
07CE 2D                 RST     LOOP SHR 3      ;EXIT
                        ;
07CF            LCRSE   EQU     $       ;LOAD COMPARE REG.
                                IF F104
                        CPI     1BH     ;IS IT AN ESC?
                                ENDIF
                                IF F105
07CF 3C10               CPI     10H     ;IS IT DLE?
                                ENDIF
07D1 68ED07             JZ      LCREND  ;IF SO WERE DONE
                        LAD     CPRLEN
07D4 36E0                       MVI L,CPRLE AND 0FFH

07D6 C7                 MOV     A,M
07D7 3C10               CPI     16      ;IS REG FULL?
07D9 69E307             JZ      LCRERR  ;IF SO WERE DONE
07DC 0401               ADI     1       ;INCR LENGTH COUNTER
07DE F8                 MOV     M,A
07DF 86                 ADD     L       ;ADD IT TO POINTER
07E0 F0                 MOV     L,A
07E1 FA                 MOV     M,C     ;PUT CHAR IN CPR REG
07E2 2D                 RST     LOOP SHR 3      ;EXIT
                        ;
07E3 0601       LCRER:  MVI     A,1     ;TO MANY CHARS
07E5 5D                 OUT     0EH     ;RING BUZZER
                        LAD     IND3
07E6 36D4                       MVI L,IND3 AND 0FFH

07E8 C7                 MOV     A,M
07E9 3404               ORI     4       ;TURN ON BUF FULL IND
07EB 59                 OUT     0CH
07EC 2D                 RST     LOOP SHR 3
                        ;
                        LCREN:  LAD     ESCFLG  ;TURN OFF LCR MODE
07ED 36D8                       MVI L,ESCFL AND 0FFH

07EF 3E00               MVI     M,0
                        LAD     IND3
07F1 36D4                       MVI L,IND3 AND 0FFH

                        ANM     0FDH    ;TURN OFF CHAR INSRT MODE
07F3 C7                         MOV     A,M
07F4 24FD                       ANI     000FDH
07F6 F8                         MOV     M,A

07F7 59                 OUT     0CH
```

```
07F8 2D                 RST     LOOP SHR 3
                        ;
                        ;
                        ;
                        ;
                        ;
                        ;
07F9 DD         SSFWD:  MOV     D,H     ;INIT CPR REG PTR
07FA 26E1               MVI     E,CPRREG AND OFFH
07FC 606008             JC      SSFNB
07FF 706008             JM      SSFNB
0802 CF         SSFGT:  MOV     B,M     ;GET BUFFER PTR
0803 30                 INR     L
0804 D7                 MOV     C,M
0805 A8                 XRA     A
0806 440D08             JMP     SSFGC
                        ;
0809 10         SSFNX:  INR     C       ;STEP BUFPTR
080A 686008             JZ      SSFNB   ;IF ZERO BUFFER IS EMPTY
080D E9         SSFGC:  MOV     H,B
080E F2                 MOV     L,C     ;POINT TO BUFFER
080F B7                 ORA     M       ;GET CHAR
0810 680908             JZ      SSFNXC  ;IF NULL IGNORE IT
0813 EB                 MOV     H,D
0814 F4                 MOV     L,E     ;POINT TO CPRREG
0815 BF                 CMP     M
                        LAD     CPRCNT
0816 36DF                       MVI L,CPRCN AND OFFH

0818 C7                 MOV     A,M     ;GET COMP COUNT
0819 682A08             JZ      SSFMCH
081C 3C01               CPI     1       ;TEST CPRCNT
081E 600908             JC      SSFNXC  ;CC=0
0821 483708             JNZ     SSFADJ  ;CC>1
0824 A8                 XRA     A       ;CC=1
0825 F8                 MOV     M,A     ;RESET COUNT
0826 21                 DCR     E       ;RESET CPRREG PTR
0827 440D08             JMP     SSFGC   ;TRY AGAIN
                        ;
082A 0401       SSFMC:  ADI     1       ;INC CPR CNT
082C F8                 MOV     M,A
082D 30                 INR     L       ;POINT TO CPRLEN
082E BF                 CMP     M       ;LAST CHAR?
082F 686608             JZ      SSFFND  ;IF SO WE HAVE A MATCH
0832 20                 INR     E       ;IF NOT TRY NEXT CHAR
0833 A8                 XRA     A
0834 440908             JMP     SSFNXC
                        ;
                SSFAD:  LAD     BUFPTR
0837 36D1                       MVI L,BUFPT AND OFFH

0839 FA                 MOV     M,C
083A 1EE1               MVI     D,CPRREG AND OFFH       ;INIT STRING POI
083C 16E1       SSFL:   MVI     C,CPRREG AND OFFH       ;INIT CPRREG POI
083E 0E00               MVI     B,0     ;RESET CPR CNT
0840 18         SSFLL:  INR     D       ;STEP STRNG PTR
0841 C4                 MOV     A,E
0842 BB                 CMP     D       ;END OF STRING?
0843 485408             JNZ     SSFAJ1  ;NO
0846 E2                 MOV     E,C     ;GET NEW CPRREG PTR
0847 DD                 MOV     D,H
                        LAD     CPRCNT
0848 36DF                       MVI L,CPRCN AND OFFH

084A F9                 MOV     M,B     ;SAVE NEW CPRCNT
                        LAD     CURBUF
```

```
084B 36D0                          MVI L,CURBU AND OFFH

084D CF                    MOV     B,M       ;RESTORE BUFPTR
084E 30                    INR     L
084F D7                    MOV     C,M
0850 A8                    XRA     A
0851 440D08                JMP     SSFGC     ;NOW TRY THE CHAR
                    ;
0854 F2          SSFAJ:    MOV     L,C       ;GET CHAR FROM CPRREG
0855 C7                    MOV     A,M
0856 F3                    MOV     L,D       ;COMPARE TO STRNG
0857 BF                    CMP     M
0858 483C08                JNZ     SSFL      ;NOT EQUAL
085B 10                    INR     C         ;STEP CMPR REG PTR
085C 08                    INR     B         ;STEP CMPR CNT
085D 444008                JMP     SSFLL
                    ;
0860 46B602      SSFNB:    CALL    READFW    ;GET NEXT BUFFER
0863 440208                JMP     SSFGTP
                    ;
0866 F2          SSFFN:    MOV     L,C       ;MATCH
0867 44BB05                JMP     FOUND
                    ;
                    ;
                    ;
086A 622806      SSREV:    CC      READRV    ;IF BUFFER EMPTY GET BLOCK
086D DD                    MOV     D,H
                           LAD     CPRLEN
086E 36E0                          MVI L,CPRLE AND OFFH

0870 C7                    MOV     A,M
0871 86                    ADD     L
0872 E0                    MOV     E,A
                           LAD     CURBUF
0873 36D0                          MVI L,CURBU AND OFFH

0875 CF          SSRGT:    MOV     B,M
0876 30                    INR     L
0877 D7                    MOV     C,M
0878 11          SSRNX:    DCR     C
0879 C2                    MOV     A,C
087A 3CFF                  CPI     OFFH
087C 68D808                JZ      SSRNB
087F E9          SSRGC:    MOV     H,B       ;POINT TO BUFFER
0880 F2                    MOV     L,C
0881 C7                    MOV     A,M
0882 B0                    ORA     A
0883 687808                JZ      SSRNXC
0886 EB                    MOV     H,D
0887 F4                    MOV     L,E
0888 BF                    CMP     M
                           LAD     CPRCNT
0889 36DF                          MVI L,CPRCN AND OFFH

088B C7                    MOV     A,M
088C 689D08                JZ      SSRMCH
088F 3C01                  CPI     1
0891 607808                JC      SSRNXC    ;CC=0
0894 48AA08                JNZ     SSRADJ    ;CC>1
0897 3E00                  MVI     M,0       ;CC=1
0899 20                    INR     E
089A 447F08                JMP     SSRGC
                    ;
089D 0401        SSRMC:    ADI     1
089F F8                    MOV     M,A
08A0 06E1                  MVI     A,CPRREG AND OFFH
```

```
08A2 BC                 CMP     E
08A3 68E208             JZ      SSRFND
08A6 21                 DCR     E
08A7 447808             JMP     SSRNXC
                        ;
                SSRAD:  LAD     BUFPTR
08AA 36D1                       MVI L,BUFPT AND 0FFH

08AC FA                 MOV     M,C
                        LAD     CPRLEN
08AD 36E0                       MVI L,CPRLE AND 0FFH

08AF C7                 MOV     A,M
08B0 86                 ADD     L
08B1 D8                 MOV     D,A
                SSRL:   LAD     CPRLEN
08B2 36E0                       MVI L,CPRLE AND 0FFH

08B4 C7                 MOV     A,M
08B5 86                 ADD     L
08B6 D0                 MOV     C,A
08B7 0E00               MVI     B,0
08B9 19         SSRLL:  DCR     D
08BA C4                 MOV     A,E
08BB BB                 CMP     D
08BC 48CC08             JNZ     SSRAJ1
08BF E2                 MOV     E,C
08C0 DD                 MOV     D,H
                        LAD     CPRCNT
08C1 36DF                       MVI L,CPRCN AND 0FFH

08C3 F9                 MOV     M,B
                        LAD     CURBUF
08C4 36D0                       MVI L,CURBU AND 0FFH

08C6 CF                 MOV     B,M
08C7 30                 INR     L
08C8 D7                 MOV     C,M
08C9 447F08             JMP     SSRGC
                        ;
08CC F2         SSRAJ:  MOV     L,C
08CD C7                 MOV     A,M
08CE F3                 MOV     L,D
08CF BF                 CMP     M
08D0 48B208             JNZ     SSRL
08D3 08                 INR     B
08D4 11                 DCR     C
08D5 44B908             JMP     SSRLL
                        ;
08D8 A1         SSRNB:  ANA     B
08D9 70E608             JM      SSRROV
08DC 462806             CALL    READRV
08DF 447508             JMP     SSRGTP
                        ;
08E2 F2         SSRFN:  MOV     L,C
08E3 440306             JMP     FNDR
                        ;
08E6 462106     SSRRO:  CALL    RSTOVF
08E9 C8                 MOV     B,A
08EA 447F08             JMP     SSRGC
                        ;
                        ENDIF
                        ;
                        ;
                        ;
```

```
0000                    END

P=
```